MODEL K-AL

STANDARD LIFT

GENERAL OPERATING CLEARANCES

TYPE	HEAD ROOM		SIDE ROOM		DEPTH INTO ROOM	CENTERLINE OF SPRINGS	
	2" TRACK	3" TRACK	2" TRACK	3" TRACK		2" TRACK	3" TRACK
STANDARD LIFT	16-1/2"	20"	4-1/2"	5-1/2"	OPENING "B" + 18"	OPENING "B" + 13-1/2"	OPENING "B" + 15-1/2"

NOTE: ABOVE CLEARANCES FOR MANUAL OPERATION. TROLLEY OPERATOR REQUIRES 3" ADDITIONAL HEAD ROOM AND 48" ADITIONAL DEPTH INTO ROOM.

STANDARD SPECIFICATIONS

- SECTIONS ARE 2" THICK ALUMINUM EXTRUSION OF 6063T6 ALLOY, CLEAR ANODIZED FINISH STANDARD.
- SECTIONS ARE GLAZED WITH 1/8" DSB GLASS, WITH BOTTOM PANELS OF .050 ALUMINUM, STANDARD
- LOCKS: INSIDE LOCK STANDARD.
- HARDWARE: 10 BALL BEARING ROLLERS, 14 GAUGE MINIMUM HEAVY DUTY GALVANIZED HINGES, ANGLES AND TRACK.
- 10,000 CYCLE TORSION SPRINGS.
- SPRING MOUNTING PADS BY OTHERS.
- SHAFT TO BE BALL BEARING MOUNTED:

☐ TUBULAR SHAFT

SOLID SHAFT

☐ 1" ☐ 1-1/4"

TOP AND BOTTOM RAIL ("A")

☐ 3" ☐ 6"

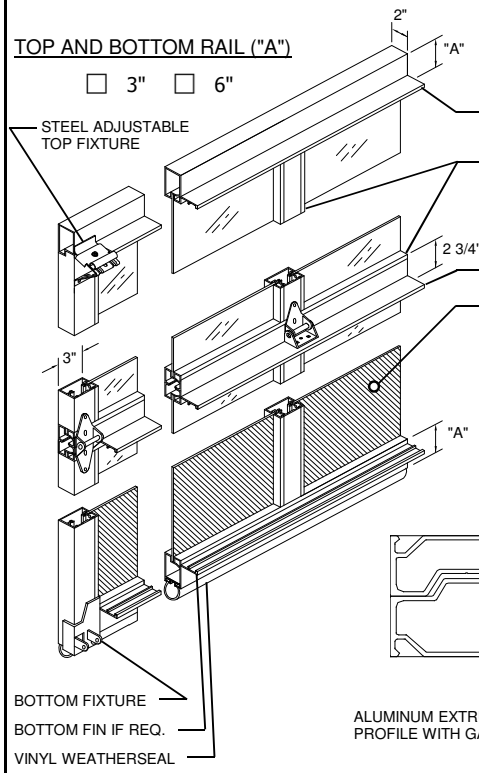

☐ ALUMINUM BOTTOM PANEL
☐ INSULATED BOTTOM PANEL
☐ GLAZED BOTTOM PANEL
☐ ALTERNATIVE:

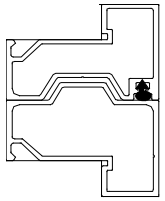

ALUMINUM EXTRUSION PROFILE WITH GASKET

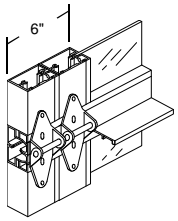

☐ DOUBLE END HINGE

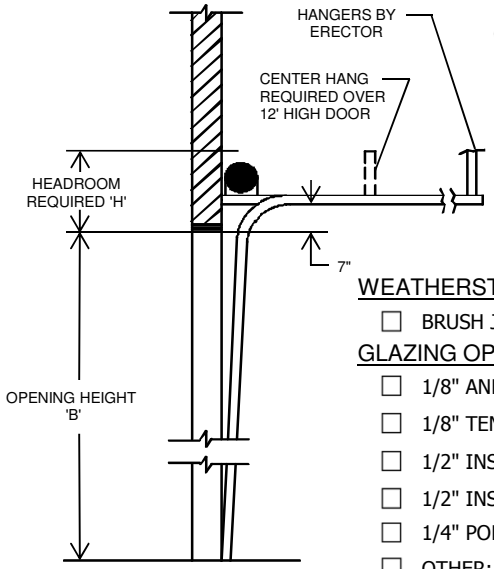

OPTIONS PROVIDED

☐ KEYED LOCK ☐ DOUBLE END
☐ BROKEN CABLE DEVICE (1 1/2" ADDITIONAL SIDEROOM REQ.)
☐ HIGH CYCLE SPRINGS - CYCLES:
☐ EXHAUST PORT - QUANTITY:
☐ OTHER:
☐ OTHER:

WEATHERSTRIPPING

☐ BRUSH JAMB AND HEAD SEAL ☐ PVC JAMB SEAL ☐ PVC HEAD SEAL

GLAZING OPTIONS

☐ 1/8" ANEALED GLASS
☐ 1/8" TEMPERED GLASS
☐ 1/2" INSULATED GLASS (CLEAR)
☐ 1/2" INSULATED GLASS (TEMPERED)
☐ 1/4" POLYCARBONATE (LEXAN)
☐ OTHER:

☐ 1/8" ACRYLIC (PEXIGLAS)
☐ SPECIAL FINISHES:

STANDARD COMMERCIAL PRODUCT SUBMITTED BASED ON DESIGN CRITERIA PROVIDED. MINIMUM WIND LOAD AS REQUIRED BY THE AUTHORITY HAVING JURISDICTION OVER THE GEOGRAPHICAL LOCATION OF DOOR(S). INSTALLATION MAY REQUIRE ADDITIONAL DESIGN CONSIDERATION AND/OR CLEARANCES.

☐ 2" TRACK ☐ 3" TRACK

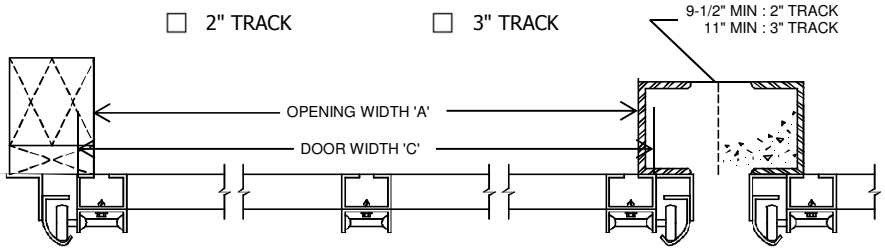

JAMB DETAIL

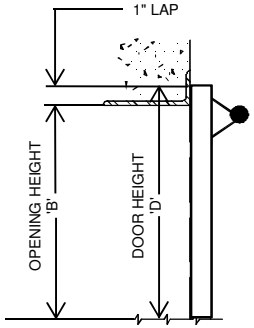

☐ WOOD JAMB ☐ TYPICAL STEEL ☐ BRACKET ☐ ANGLE IN ☐ ANGLE OUT

COMMERCIAL ALUMINUM FULL VIEW

SOLD TO:

JOB:

LOCATION:

Wayne Dalton

A DIVISION OF OVERHEAD DOOR

PREPARED BY

DATE

CUSTOMER NO.

DWG NO.

THIS DWG SHOULD BE RETAINED BY CUSTOMER FOR SERVICE AND/OR REPAIR REFERENCE

ITEM NO.	DOOR QTY	OPENING SIZE		DOOR SIZE		SECTIONS HIGH	PANELS WIDE	OPERATION	HEADROOM "H"	EQUAL PANEL WIDE	EQUAL SECTIONS HIGH	SUPPLEMENTAL DRAWINGS
		A	B	C	D							