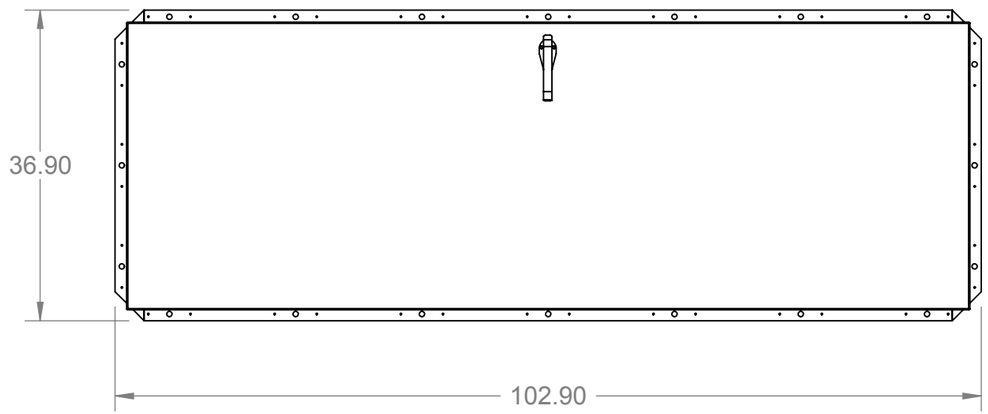

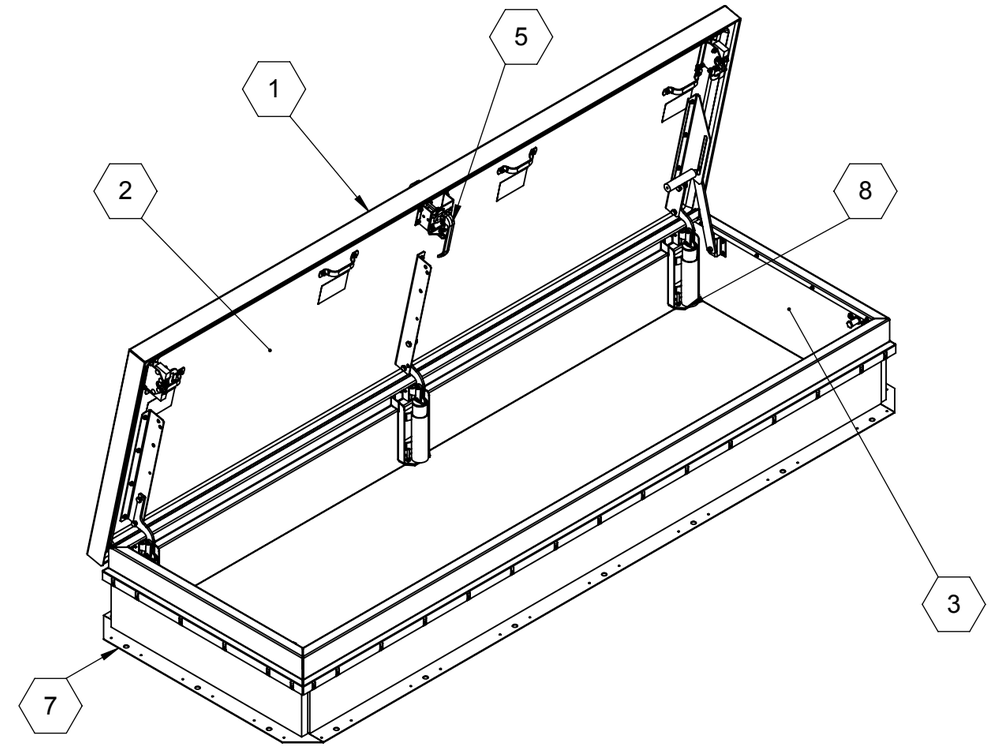

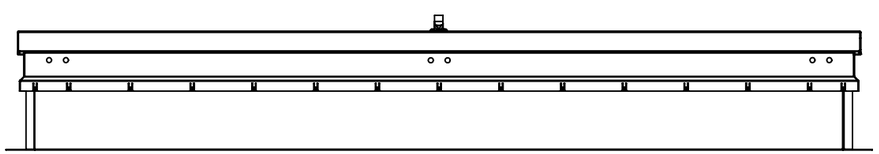

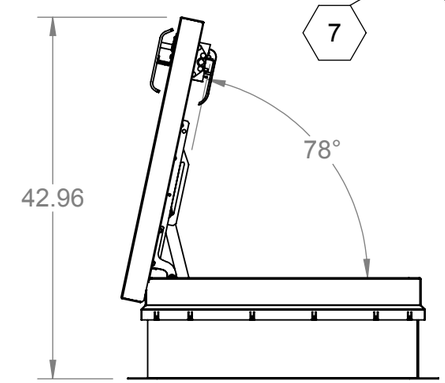

1. COVER - 11 GAUGE ALUMINUM COVER STIFFENED TO WITHSTAND A LIVE LOAD OF 40 PSF WITH A MAX DEFLECTION OF 1/150 OF THE SPAN. COVER WITHSTANDS A MAX WIND UPLIFT OF 20 PSF.
2. LINER - 18 GAUGE ALUMINUM
3. CURB - 11 GAUGE ALUMINUM
4. HARDWARE - ZINC PLATED STEEL
5. LATCH - 2 POINT LATCHING WITH PROVISION FOR PADLOCK SECURITY
6. INSULATION - 1" THICK IN COVER AND 1" THICK ON CURB PERIMETER
7. MOUNTING FLANGE - 3.50 INCHES
8. HINGE - ZINC PLATED STEEL TAMPER PROOF HINGE CONTAINED WITHIN HATCH AS PARTOF SPRING ASSEMBLY
9. SPRING - GREASED HEAVY DUTY COMPRESSION SPRING.
10. FINISH - MILL FINISH
11. CURB OPENING - 30 X 96 INCHES MEASURE INSIDE CURB TO INSIDE CURB

BRHPA30X96S1T

Babcock-Davis®
Always right there.
9300 73rd Avenue North
Brooklyn Park, MN 55428

TITLE:
DESCRIPTION LINE 1
DESCRIPTION LINE 2
DESCRIPTION LINE 3

	NAME	DATE	SIZE	DWG. NO.	REV
DRAWN	DWO	TODAY	B	BRHPA30X96S1T	-
RELEASED	DWO	TODAY	WEIGHT: 218.45	SHEET 21 OF 22	

PROPRIETARY AND CONFIDENTIAL: THE INFORMATION CONTAINED IN THIS DRAWING IS THE SOLE PROPERTY OF BABCOCK-DAVIS. ANY REPRODUCTION IN PART OR AS A WHOLE WITHOUT THE WRITTEN PERMISSION OF BABCOCK-DAVIS IS PROHIBITED.

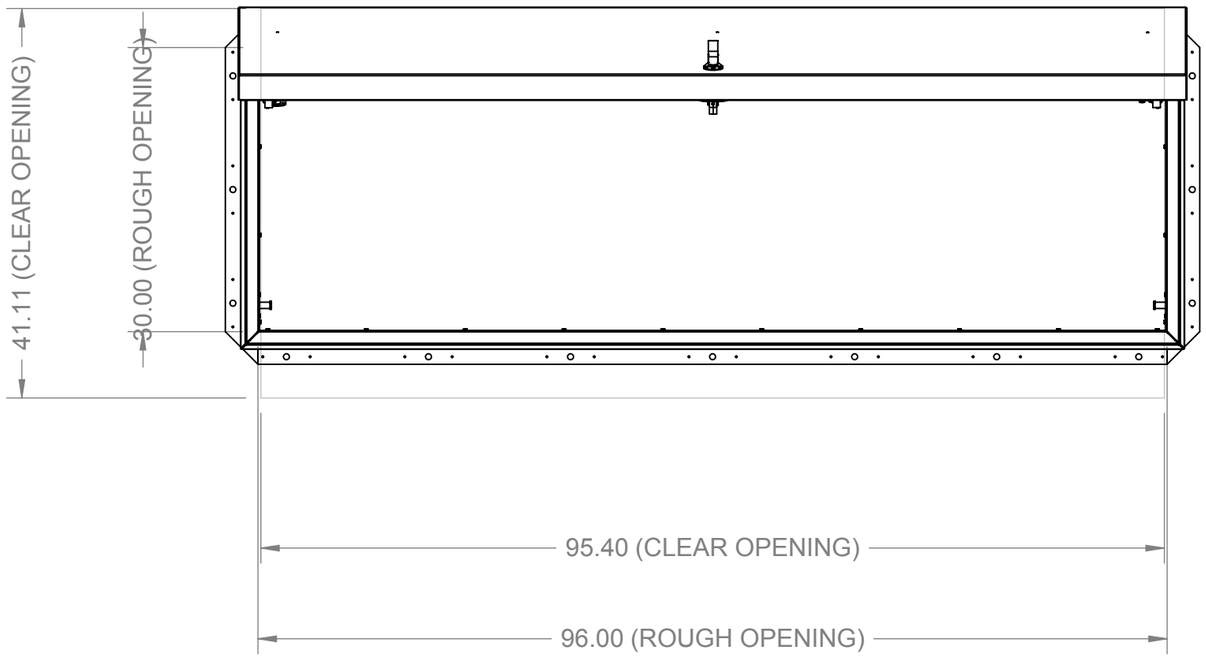

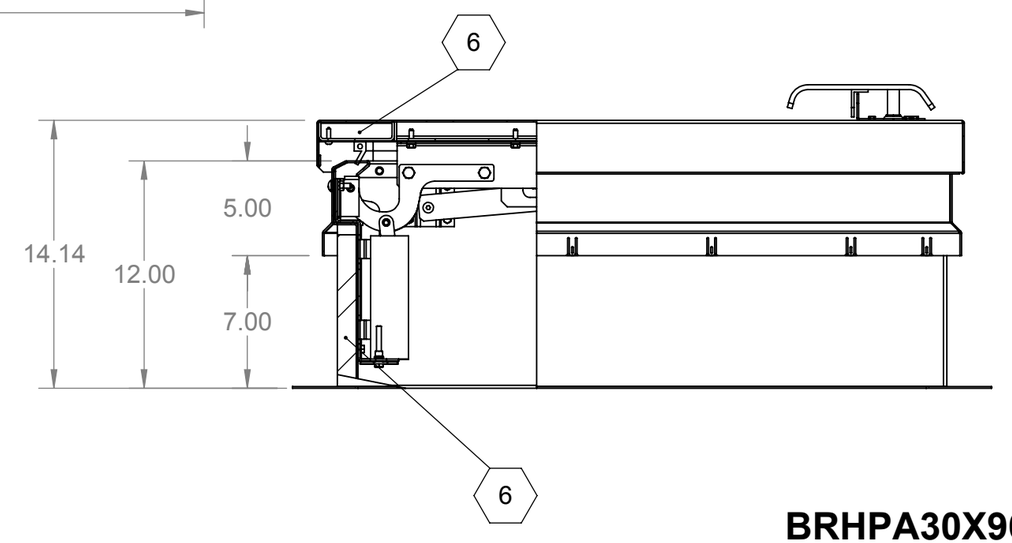

EZ TAB
QUICK FLASHING SYSTEM FOR MEMBRANE ROOFS

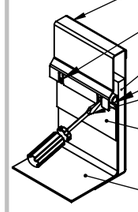

- COUNTERFLASHING
- EZ TAB
- FIBERBOARD INSULATION (DO NOT REMOVE)
- FOAM BACKER ROD (OPTIONAL, BY OTHERS)
- POSITION A SCREW DRIVER INTO THE SLOTTED EZ TAB AND STRIKE WITH A HAMMER TO BEND IT INWARD AND MECHANICALLY SECURE THE EZ TAB
- FOLD OVER 4" OF MEMBRANE FLASHING AND INSERT IT UNDER THE CURB COUNTERFLASHING APPLY ADHESIVE ONTO THE FOLD AND SMOOTH FLAT
- ROOFING MEMBRANE (BY OTHERS)

BRHPA30X96S1T

Babcock-Davis®
Always right there.
9300 73rd Avenue North
Brooklyn Park, MN 55428

TITLE:
DESCRIPTION LINE 1
DESCRIPTION LINE 2
DESCRIPTION LINE 3

	NAME	DATE	SIZE	DWG. NO.	REV
DRAWN	DWO	TODAY	B	BRHPA30X96S1T	-
RELEASED	DWO	TODAY	WEIGHT: 218.45		SHEET 22 OF 22

PROPRIETARY AND CONFIDENTIAL: THE INFORMATION CONTAINED IN THIS DRAWING IS THE SOLE PROPERTY OF BABCOCK-DAVIS. ANY REPRODUCTION IN PART OR AS A WHOLE WITHOUT THE WRITTEN PERMISSION OF BABCOCK-DAVIS IS PROHIBITED.