9300 73rd Ave N.
Brooklyn Park, MN 55428

Toll-Free: 800-547-2635
Fax 800-317-8770

NYSTROM
Right to site.

Direct Phone: 763-488-9200
Direct Fax: 763-488-9201

e-mail: info@nystrom.com
Internet: www.nystrom.com

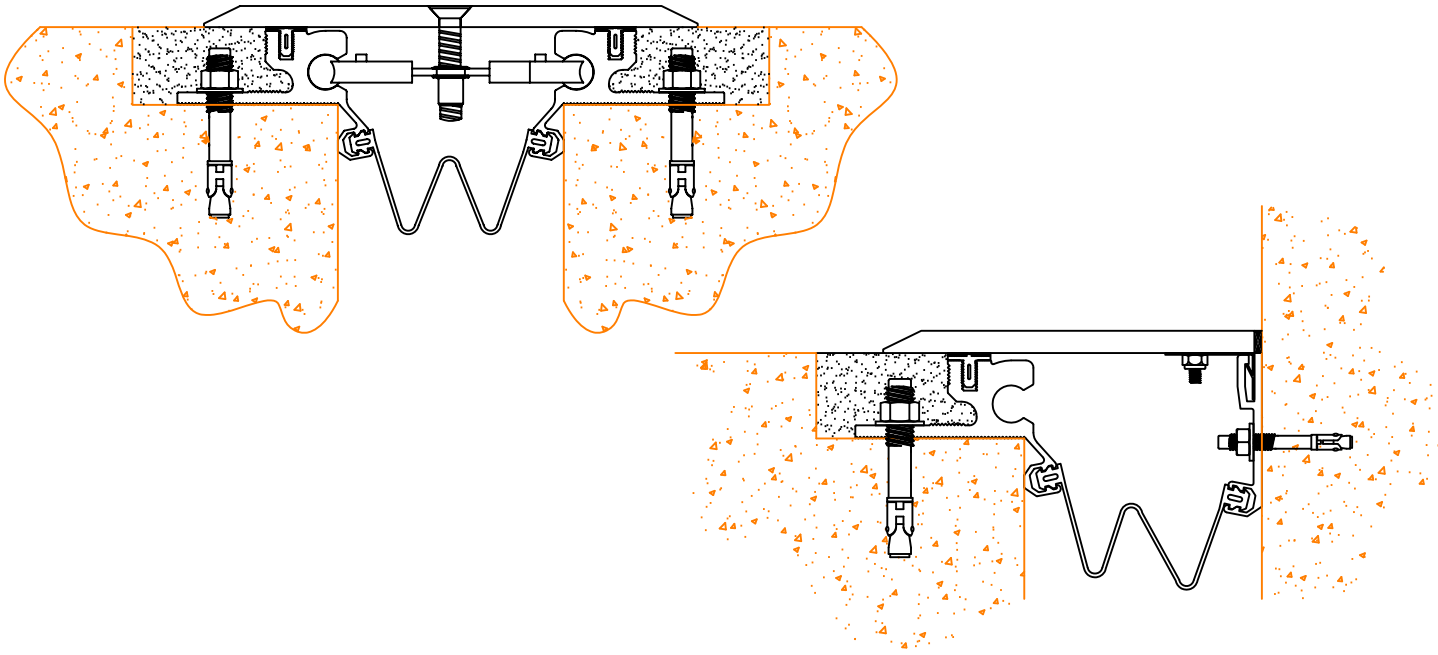

Seismic Span
Traffic Series Model(s) "EJ-PTS" and "EJ-PTS-W"
Horizontal Expansion Control Systems

The following installation procedure is very important and must be fully understood prior to beginning any work. To ensure proper installation and performance of expansion joint system the following actions must be completed by the installing contractor. Failure to do so will affect product warranty.

1) Carefully read and understand installation procedure. Contact Technical Service Department at (800) 677-4922 for product assistance.
2) Inspect all shipments and materials for missing or damaged components and hardware. Contact Customer Service at (800) 677-4922 with order number and invoice for prompt assistance.
3) Inspect substrate or adjacent construction for acceptance before beginning work. Report unacceptable construction to the project manager for scheduled repair work.

PN: 20120

Standard Components

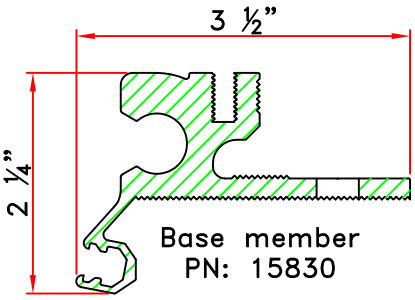

Base member
PN: 15830

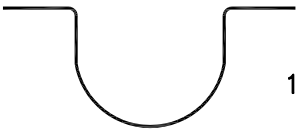

Moisture barrier for
EJ–PTS–1800 & 1800W
PN: 2962

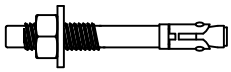

1/4" x 2 1/4" Hilti kwik bolt
PN: 6581

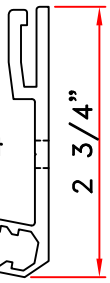

Corner Mount Bracket
PN: 18044

Vibration gasket
PN: 15827

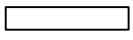

1/4" ø Washer
PN: 7477
(for slip connector only)

1/4" x 1"
Self–Tapping Screw
PN: 5634

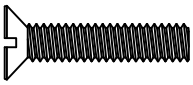

3/8" x 2" Screw
PN: 5595

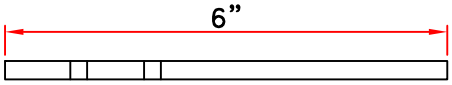

1/4" Splice Bar
PN: 14050
(Floor–Floor Conditions Only)

Adhesive Prima–Lub
PN: 2720

1/4" ø Nut
PN: 7873
(For slip connector only)

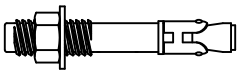

3/8" x 3" Hilti kwik bolt
PN: 6591

Components shown below vary in size depending on model of system

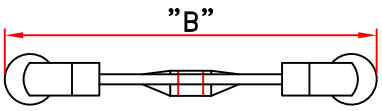

Seismic–Centering bar
(refer to chart for size and PN)

Model #	P/N	"B" dim.
EJ-PTS-200	15645	7 3/8"
EJ-PTS-400	15645	7 3/8"
EJ-PTS-600	15646	12 3/8"

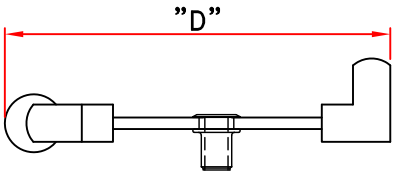

Seismic–Centering bar
(refer to chart for size and PN)

Model #	P/N	"D" dim.
EJ-PTS-1000W	15650	12"
EJ-PTS-1200W	15651	14"
EJ-PTS-1500W	15652	16"
EJ-PTS-1800W	15653	19"

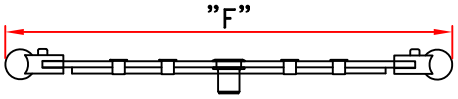

Seismic–Centering bar
(refer to chart for size and PN)

Model #	P/N	"F" dim.
EJ-PTS-800	15632	18 3/8"
EJ-PTS-1000	15632	18 3/8"
EJ-PTS-1200	15633	22 3/8"
EJ-PTS-1500	15634	26 3/8"
EJ-PTS-1800	15667	32 3/8"

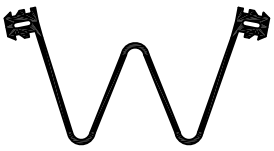

Functional seal
(refer to chart for size and PN)

Model #	P/N
EJ-PTS-200/200W	1181
EJ-PTS-400/400W	1181
EJ-PTS-600/600W	1175
EJ-PTS-800/800W	1175
EJ-PTS-1000/1000W	1176
EJ-PTS-1200/1200W	1176
EJ-PTS-1500/1500W	1177

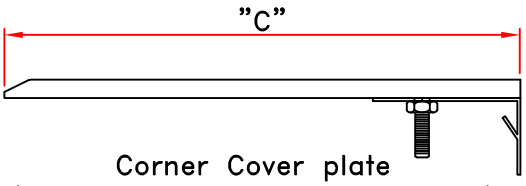

Corner Cover plate
(refer to chart for size and PN)

Model #	Aluminum P/N	"C" dim.	S.S. P/N
EJ-PTS-200W	14408	3 3/4"	14424
EJ-PTS-400W	14409	6 1/4"	14425
EJ-PTS-600W	14410	8 3/4"	14426
EJ-PTS-800W	14411	11 1/4"	14427
EJ-PTS-1000W	14412	13 3/4"	14428
EJ-PTS-1200W	14413	16 1/4"	14429
EJ-PTS-1500W	14414	20 1/4"	14430
EJ-PTS-1800W	14415	23 3/4"	14431

Installation Procedure

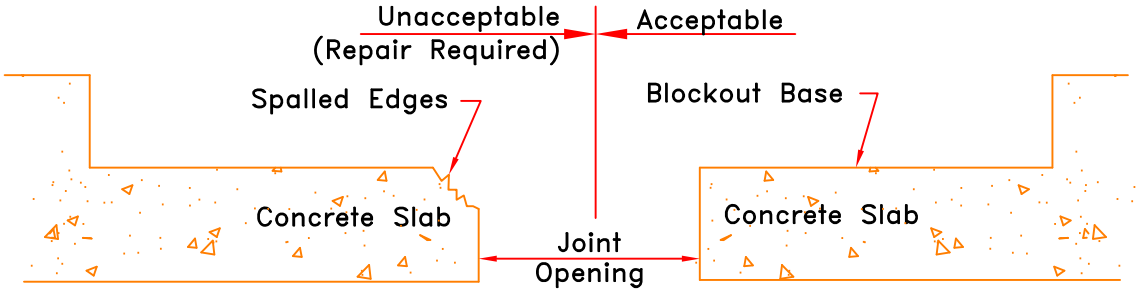

Model #	J.O.	Model #	J.O.
EJ-PTS-200	2"	EJ-PTS-1000	10"
EJ-PTS-400	4"	EJ-PTS-1200	12"
EJ-PTS-600	6"	EJ-PTS-1500	15"
EJ-PTS-800	8"	EJ-PTS-1800	18"

1

Prepare concrete block out for installation of Seismic Span Expansion Control System. Deficiencies in block out base and spalled edges must be corrected prior to beginning work.
Note: Utilizing concrete repair material, repair corner of concrete slab following manufacturers written instructions.

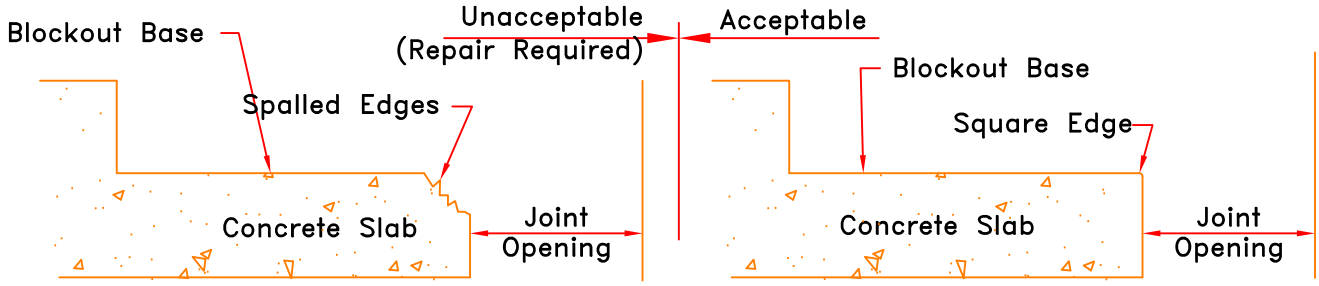

Model #	J.O.	Model #	J.O.
EJ-PTS-200W	2"	EJ-PTS-1000W	10"
EJ-PTS-400W	4"	EJ-PTS-1200W	12"
EJ-PTS-600W	6"	EJ-PTS-1500W	15"
EJ-PTS-800W	8"	EJ-PTS-1800W	18"

1A

Corner Condition: Prepare concrete block out for installation of Seismic Span Expansion Control System. Deficiencies in block out base and spalled edges must be corrected prior to beginning work.
Note: Utilizing concrete repair material, repair corner of concrete slab following manufacturers written instructions.

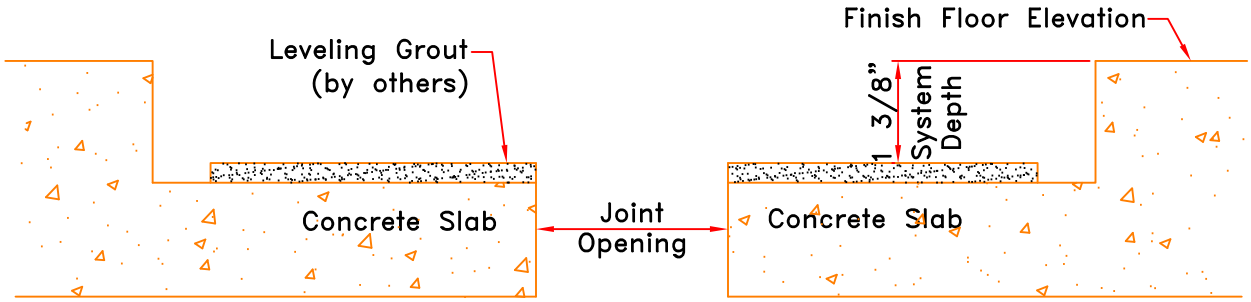

2

Prepare concrete blockout for installation of expansion joint. Variations in block out dimensions must be corrected prior to beginning work.
Note: Leveling grout usually not required if blockout was formed true and level to satisfy expansion joint system depth.

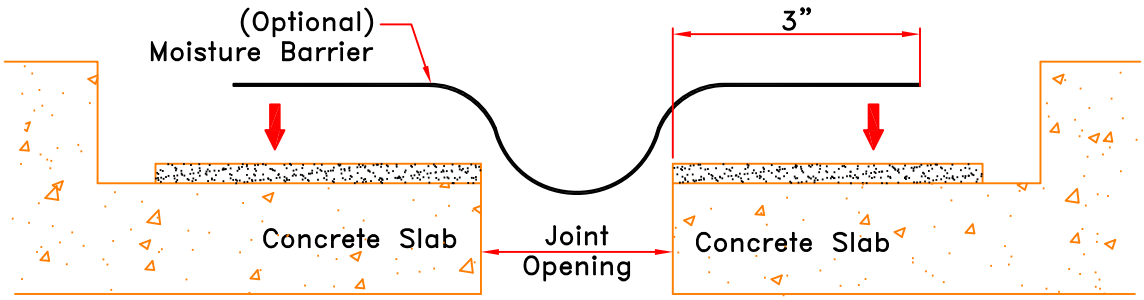

3 (EJ–PTS–1800 & EJ–PTS–1800W)
Install Moisture Barrier. Maintain proper overlap onto blockout base and temporarily affix with Duct Tape.

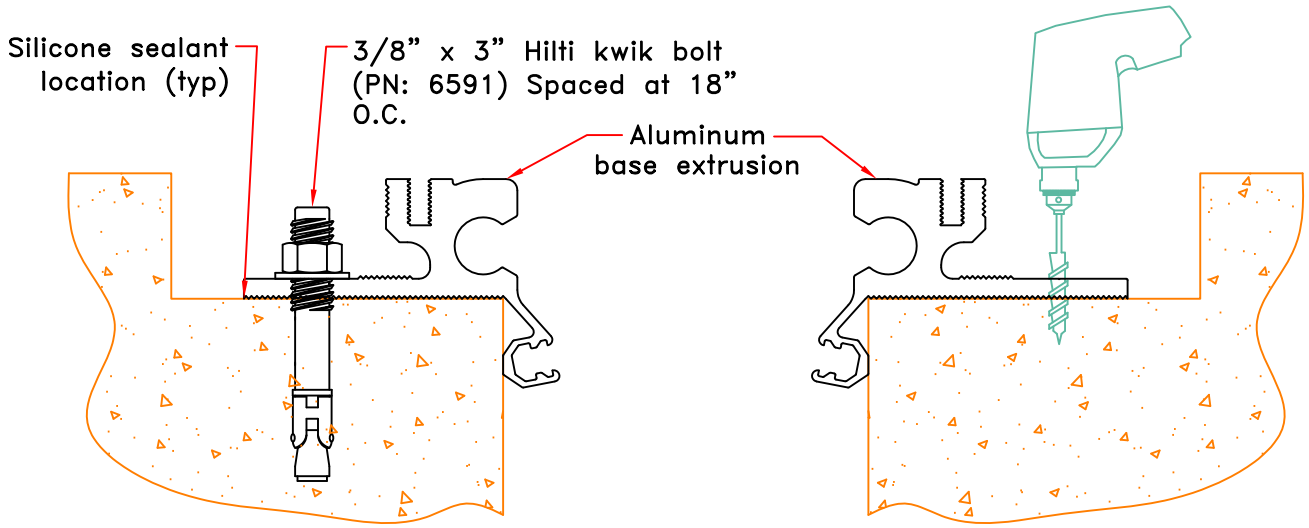

4 Place and adjust aluminum base members into blockouts. Mark anchor locations and follow Hilti recommendations for proper anchor installation. Prior to anchoring base members into place, apply a continuous bead of sealant (by others) onto blockout and at butt ends of aluminum base members. Place and anchor base member.

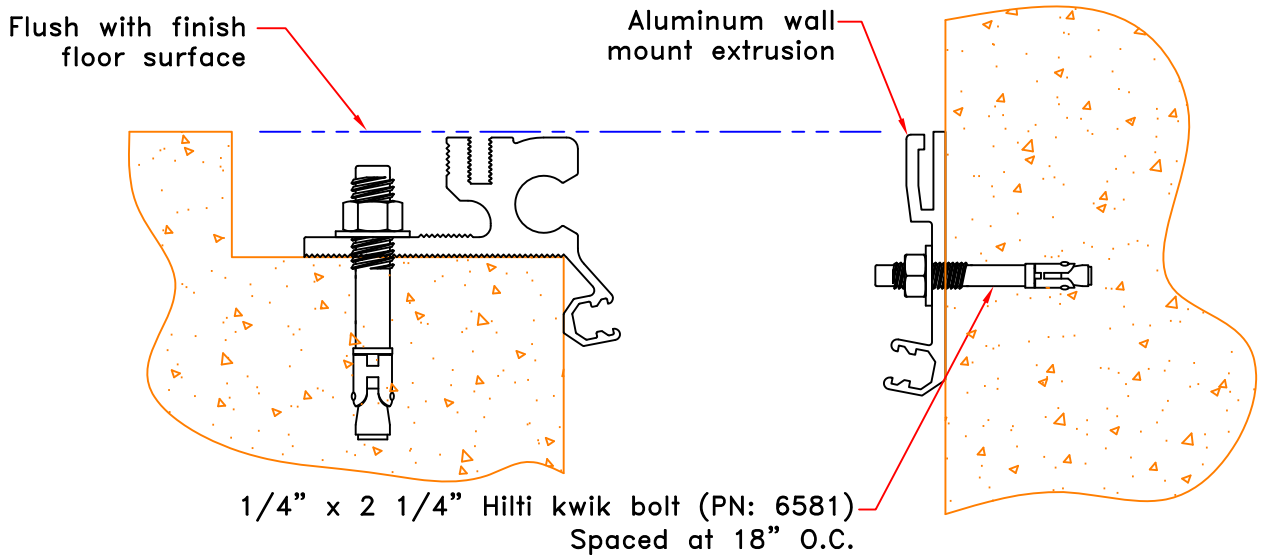

5 Place and adjust aluminum wall mount bracket into blockouts. Mark anchor locations and follow Hilti recommendations for proper anchor installation. Prior to anchoring wall mount brackets into place, apply a continuous bead of sealant (by others) onto blockout and at butt ends of aluminum wall mount brackets. Place and anchor wall mount bracket.

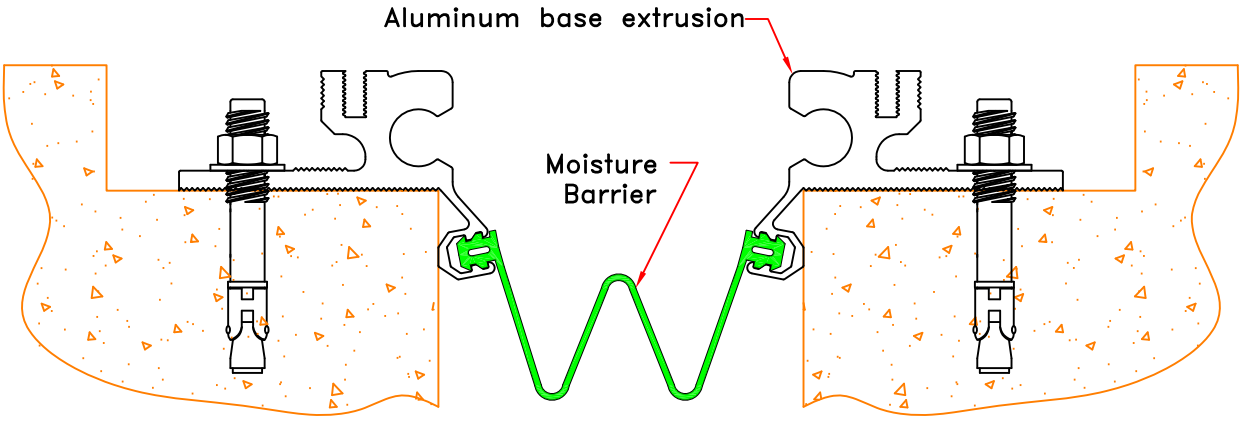

6 Install moisture barrier utlizing supplied adhesive.
Note: On custom projects, a sheet good style moisture barrier may be utlizied. Refer to Step 3 if applicable.

Note: Seismic–Centering bars are to be inserted from one end of the base member.

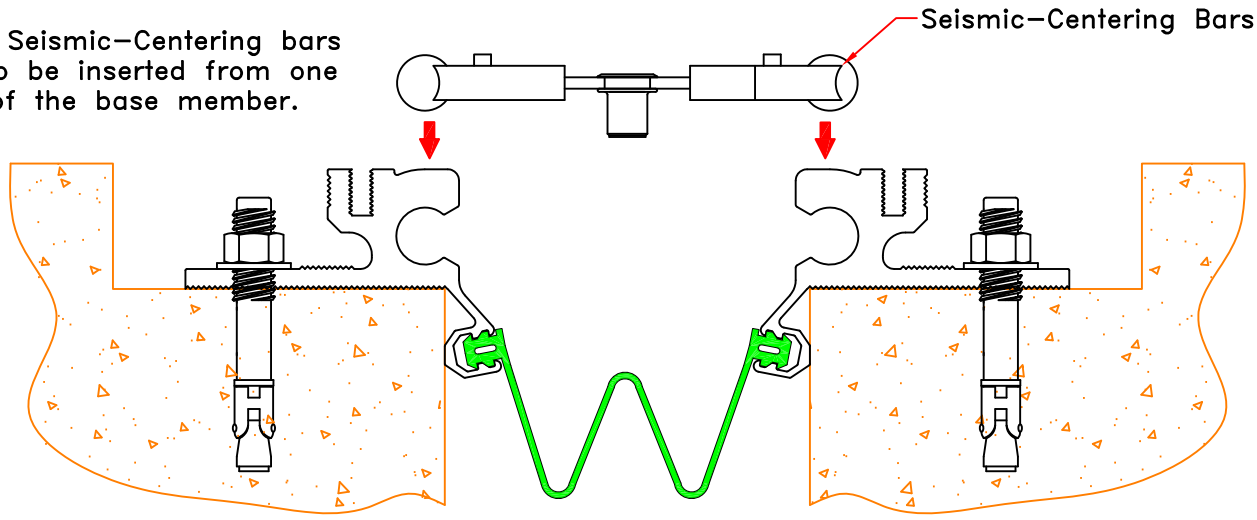

7 As work progresses with placement of base members, install Seismic–centering bars by sliding the sphered ends of the bars into and through the circular cavity of the base members. Set at an aproximate spacing of 18" O.C. Ensure that the "TOP" indicator is facing up and that bars are in same orientation.

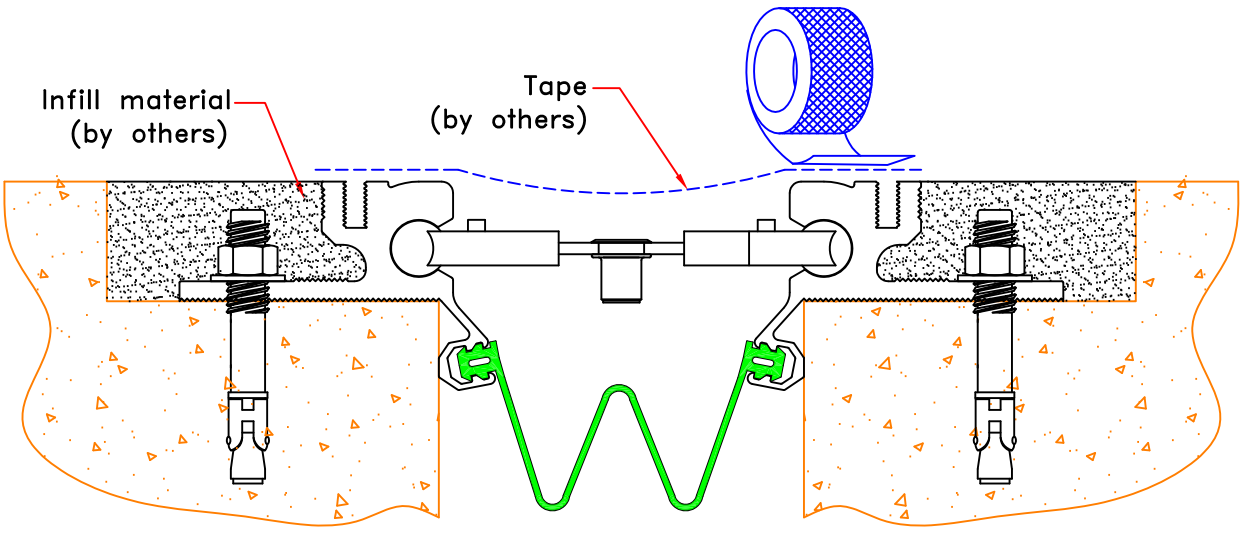

8 Tape and protect exposed metal surfaces during placement of filler material. Fill blockout with infill material. Remove tape immediately after concrete placement.

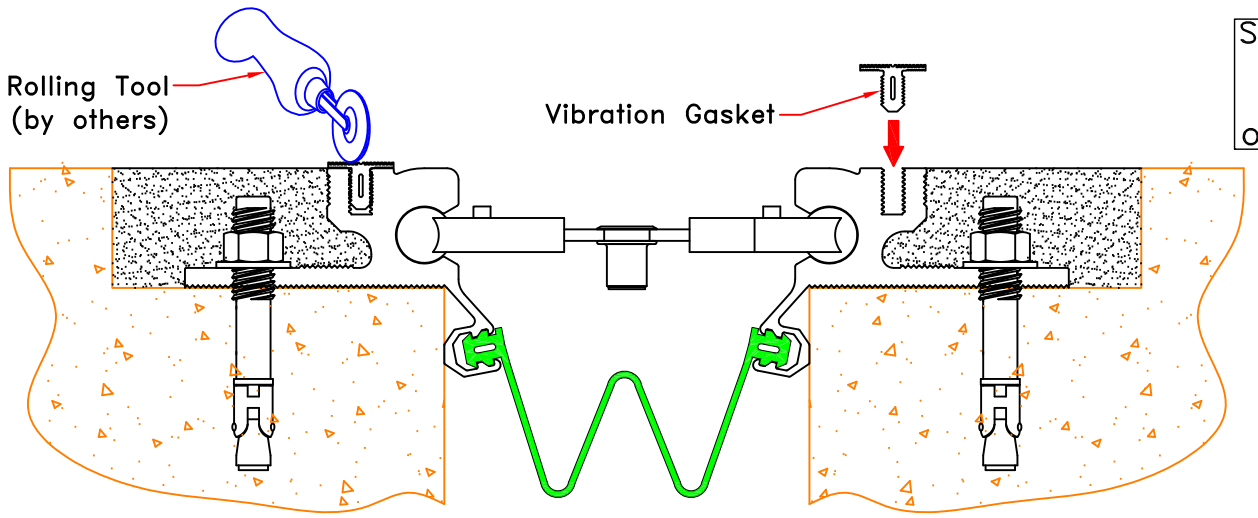

9 Install vibration gaskets utilizing adhesive provided. Roll gasket to ensure it is fully seated into the aluminum extrusion.

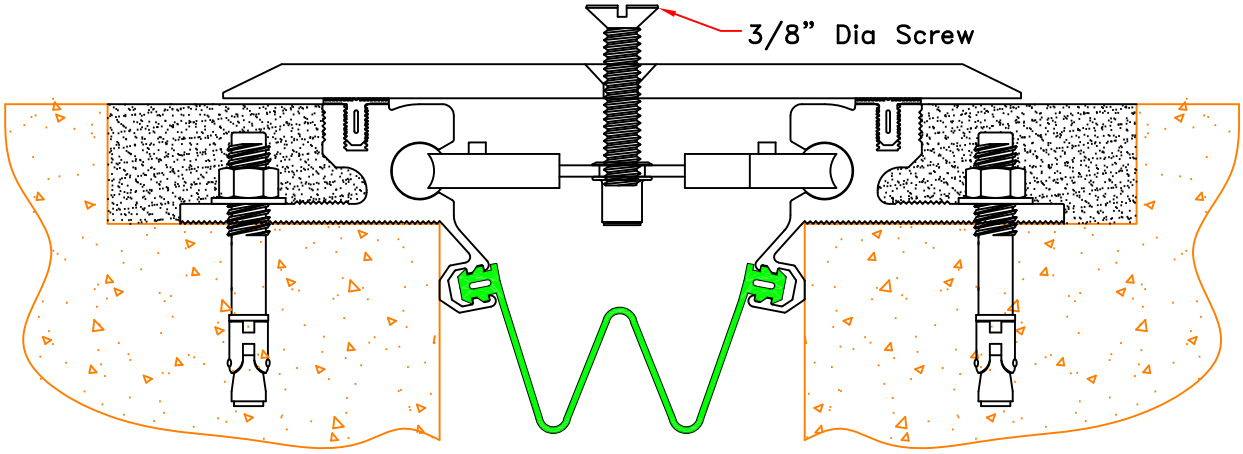

10 Align hole in cover with seismic–centering bar threaded insert. Secure cover plate to the seismic–centering bars with the 3/8" x 2" lg machine screws provided. Do not over tighten.
Note: To assure that threads do not loosen, apply Loctite Thread adhesive to threads of the 3/8" Dia screw before securing cover plate to seismic–centering bars.

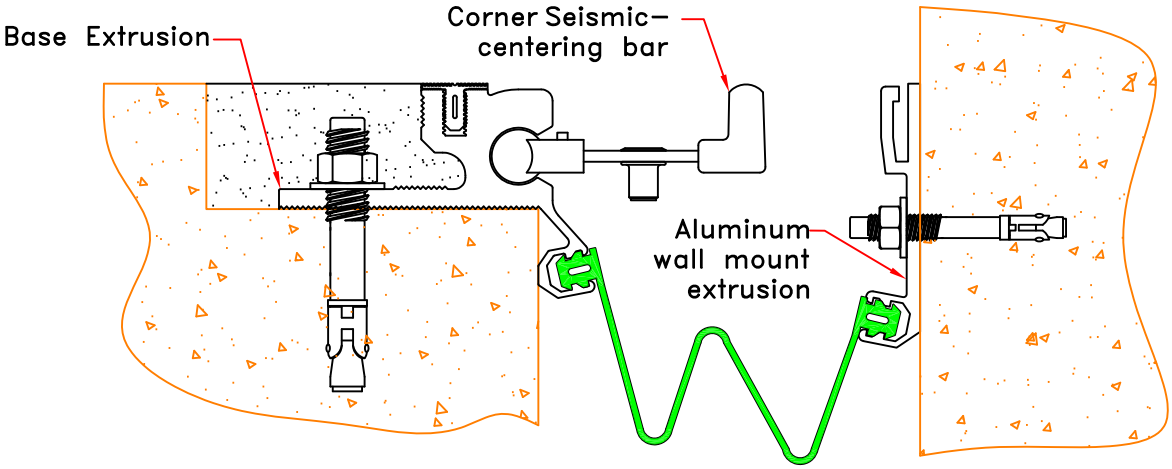

11 EJ–PTS–1000W – EJ–PTS–1800W: Slide in Corner Seismic–centering Bar into cavity of base extrusion as shown above. Seismic–Centering bar shall be spaced at 18" O.C.

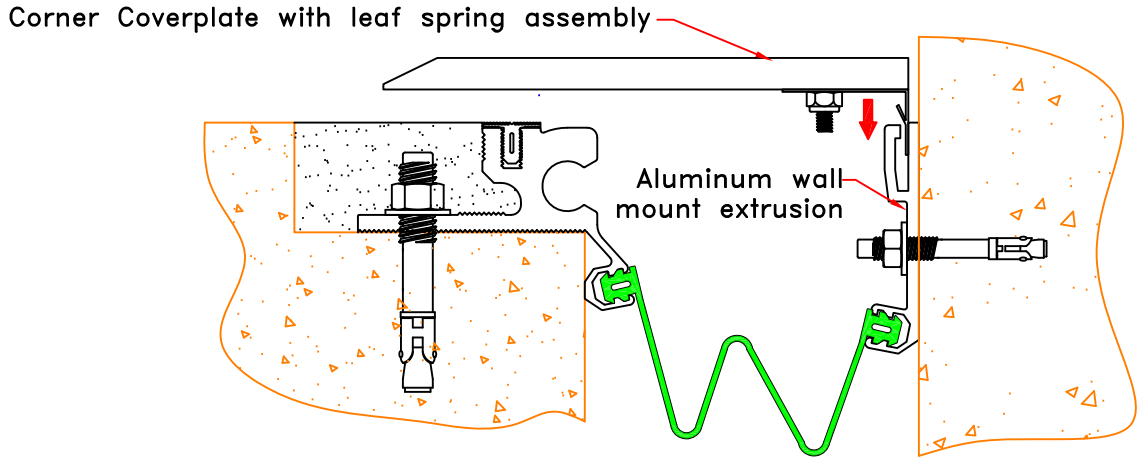

11A EJ-PTS-200W – EJ-PTS-800W: Insert and snap lock Corner cover plate with leaf spring assembly into Wall Mount Extrusion.

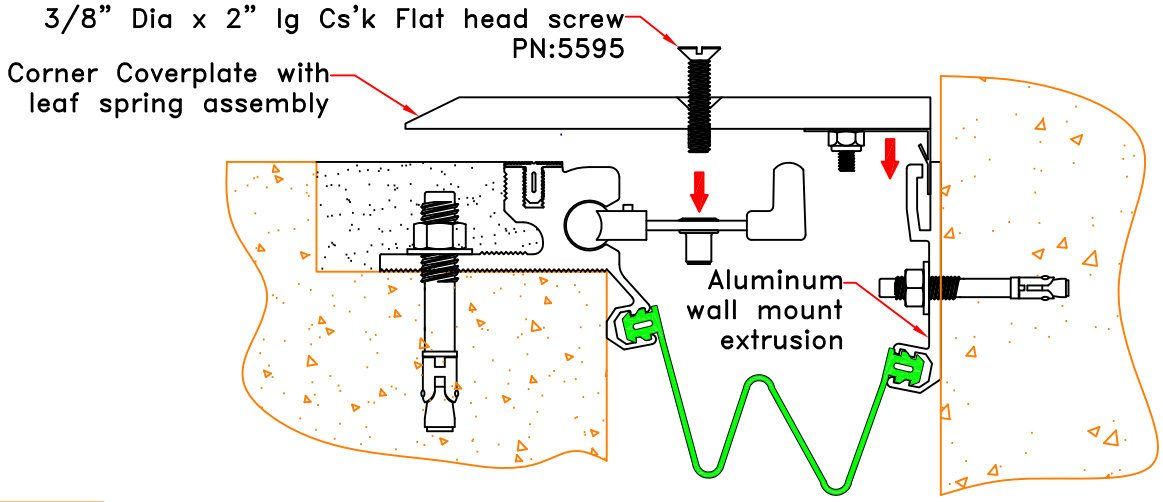

11B EJ-PTS-1000W – EJ-PTS-1800W: Insert and snap lock Corner cover plate with leaf spring assembly into Wall Mount Extrusion. Align pre-drilled holes in slide plate with threaded insert in Seismic-Centering bars. Secure with 3/8" x 2" csk Flathead screws. Tighten to create measurable tension in the bar. Do not overtighten.
Note: To assure that threads do not loosen, apply Loctite Thread adhesive to threads of the 3/8" Dia screw before securing cover plate to seismic-centering bars.

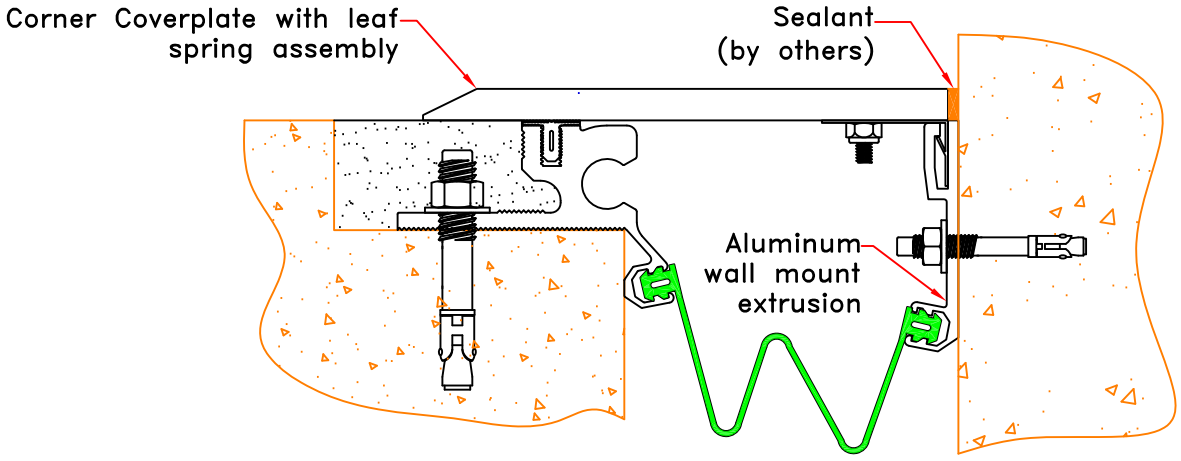

11C EJ-PTS-200W – EJ-PTS-1800W: After Corner cover plate has been installed, apply a bead of sealant (by others) along wall and edge of cover plate as shown above.

Typical Cover Plate Splice Detail
Floot to Floor Conditions Only

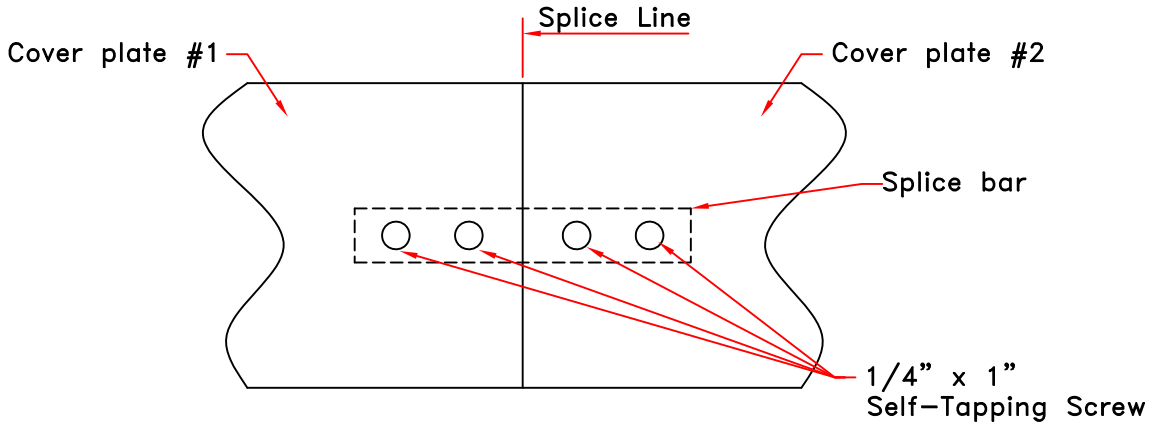

12 At cover plate splice line attach one side of splice bar to the bottom side of cover plate with 1/4" x 1" screws. After one side has been fastened, field match drill holes in splice bar utilizing a .228" dia drill bit allowing the cover plate as a template. After splice bar has been field drilled, install 1/4" x 1" screws to fasten splice bar to cover plate.

Typical Cover Plate Slip Connector Detail
Floot to Floor Conditions Only

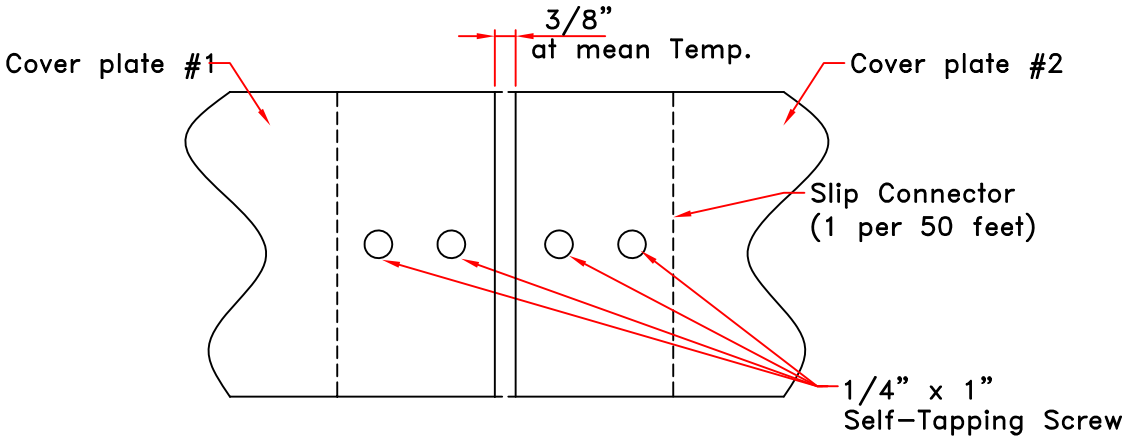

12A At every 50 ft splice line location, attach one side of slip connector to the bottom side of cover plate with 1/4" x 1" screws. After one side has been fastened, using 1/4" x 1" screws fasten cover plate into slip connector through the holes already pre drilled in coverplate.