EJ-RJS Series

Expansion joint cover for exterior applications
Roof to Roof condition

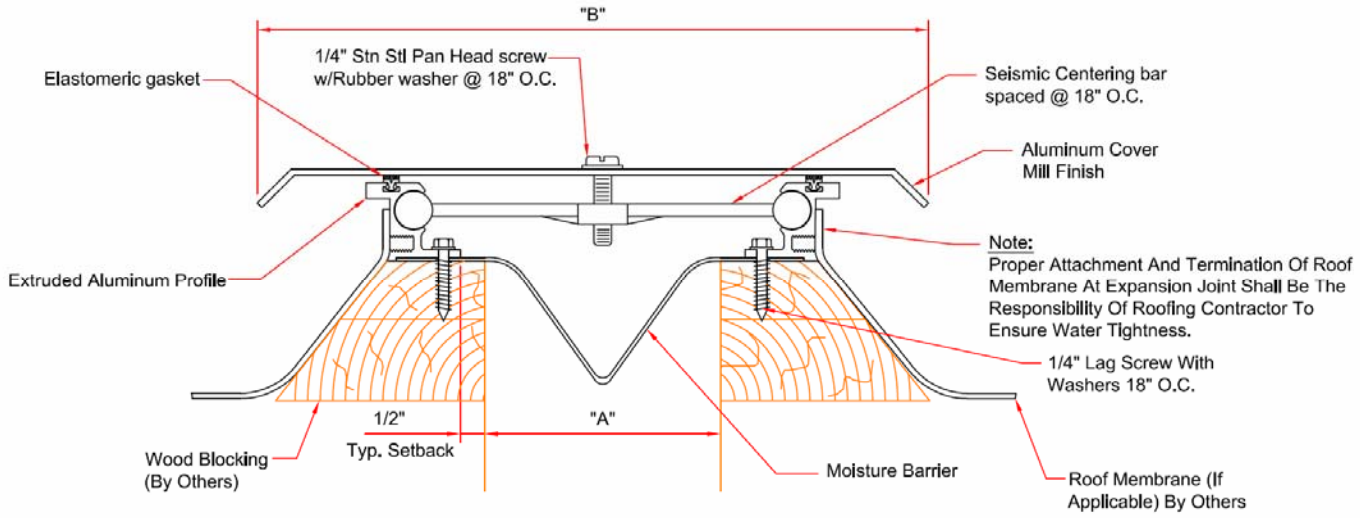

EJ-RJS-200 THRU 2400
ROOF-TO-ROOF CONDITION

( ) - Denotes Millimeters

DIMENSION CHART					
Model	"A" @ Min.	"A" @ Mid	"A" @ Max.	"B"	Total Movement
EJ-RJS-200	1/4" (6)	2"(51)	3"(76)	8"(203)	3"(76)
EJ-RJS-400	1/4" (6)	4"(102)	6"(152)	11"(279)	6"(152)
EJ-RJS-600	1/4" (6)	6"(152)	9"(229)	14"(356)	9"(229)
EJ-RJS-800	1/4" (6)	8" (203)	12"(305)	17"(432)	12"(305)
EJ-RJS-1000	1/4" (6)	10"(254)	15"(381	20"(508)	15"(381
EJ-RJS-1200	1/4" (6)	12"(305)	18"(457)	23"(584)	18"(457)
EJ-RJS-1800	1/4" (6)	18"(457)	27"(686)	32"(813)	27"(686)
EJ-RJS-2400	1/4" (6)	24"(610)	36"(914)	41"(1041)	36"(914)

Note: Minimum And Maximum Values Are After Movement Occurs. Mid Point Value Is The Recommended Size Of Opening At Installation.

DESIGN FEATURES

- ACCOMMODATES MULTI-DIRECTIONAL SEISMIC AND THERMAL MOVEMENT
- RUGGED AND DURABLE, ELIMINATING CONCERNS OF ICE, SNOW, MAINTENANCE AND ULTRA-VIOLET RAYS
- SYSTEM COMPONENTS ARE UNIVERSAL AND VERSATILE OFFERING SOLUTIONS TO ANY CONDITION

NYSTROM®
Right to site.

9300 73rd Avenue North
Brooklyn Park, MN 55428

PROJECT:

CONTRACTOR:

ARCHITECT:

INITIALS: **QTY:** **DATE:** **PART NUMBER:**