EJ-RJS-W Series

Expansion joint cover for roofs
Roof to wall condition

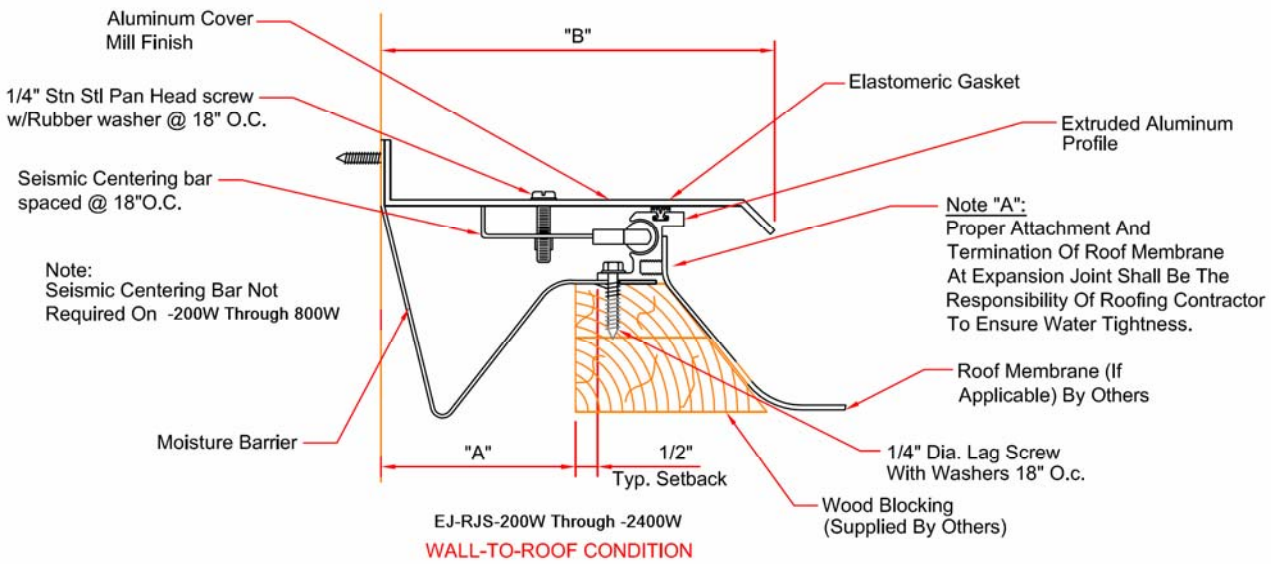

( ) - Denotes Millimeters

DIMENSION CHART					
MODEL	"A" @ MIN	"A" @ MID	"A" @ MAX	"B" SYSTEM WIDTH	TOTAL MOVEMENT
EJ-RJS-200W	0"(0)	2"(51)	3"(76)	5-1/2"(140)	3"(76)
EJ-RJS-400W	0"(0)	4"(102)	6"(152)	8-1/2"(216)	6"(152)
EJ-RJS-600W	0"(0)	6"(152)	9"(229)	11-1/2"(292)	9"(229)
EJ-RJS-800W	0"(0)	8"(203)	12"(305)	14-1/2"(368)	12"(305)
EJ-RJS-1000W	5-1/4"(134)	10"(254)	15"(381)	17-1/2"(445)	9-3/4"(248)
EJ-RJS-1200W	6-1/4"(159)	12"(305)	18"(457)	20-1/2"(521)	11-3/4"(299)
EJ-RJS-1800W	9-1/4"(235)	18"(457)	27"(686)	29-1/2"(749)	17-3/4"(451)
EJ-RJS-2400W	12-1/4"(312)	24"(610)	36"(914)	38-1/2"(978)	23-3/4"(603)

Note: Minimum And Maximum Values Are After Movement Occurs. Mid Point Value Is The Recommended Size Of Opening At Installation.

NYSTROM®

Right to site.

9300 73rd Avenue North
Brooklyn Park, MN 55428

PROJECT:

CONTRACTOR:

ARCHITECT:

INITIALS: **QTY:** **DATE:** **PART NUMBER:**