EJ-SCP SERIES

Expansion joint cover for floors

Floor to floor condition

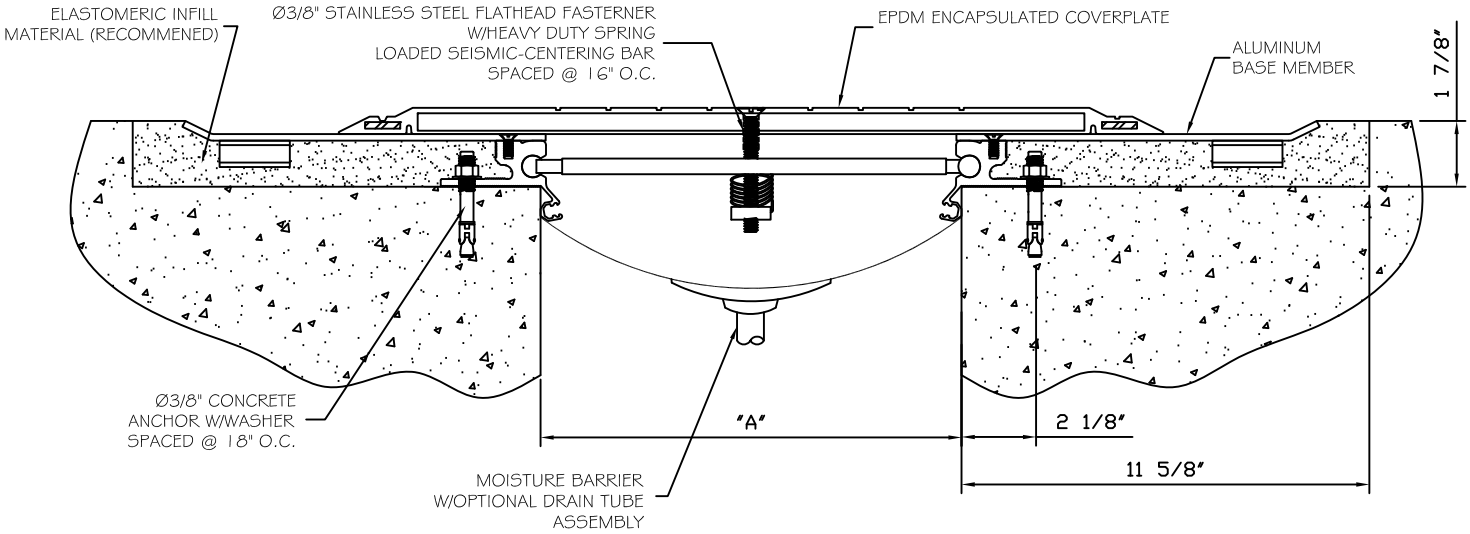

DIMENSION CHART				
MODEL	"A" @ MIN	"A" @ MID	"A" @ MAX	TOTAL MOVEMENT
EJ-SCP-1000	1 1/4"(32)	10"(254)	18"(457)	16 3/4"(425)
EJ-SCP-1200	1 1/4"(32)	12"(305)	18"(457)	16 3/4"(425)

( ) - DENOTES MILLIMETERS

NOTE: MINIMUM AND MAXIMUM VALUES ARE AFTER MOVEMENT OCCURES. MID POINT VALUE IS THE RECOMMENDED SIZE OF THE OPENING AT INSTALLATION.

NYSTROM®

Right to site.

9300 73rd Avenue North
Brooklyn Park, MN 55428

PROJECT:

CONTRACTOR:

ARCHITECT:

INITIALS: **QTY:** **DATE:** **PART NUMBER:**