NYSTROM®

Right to site.

www.nystrom.com

EJ-RJX-600 through EJ-RJX-2400

Exterior Expansion Joint Cover System for Walls and Ceilings
Wall-to-Wall or Ceiling-to-Ceiling Condition

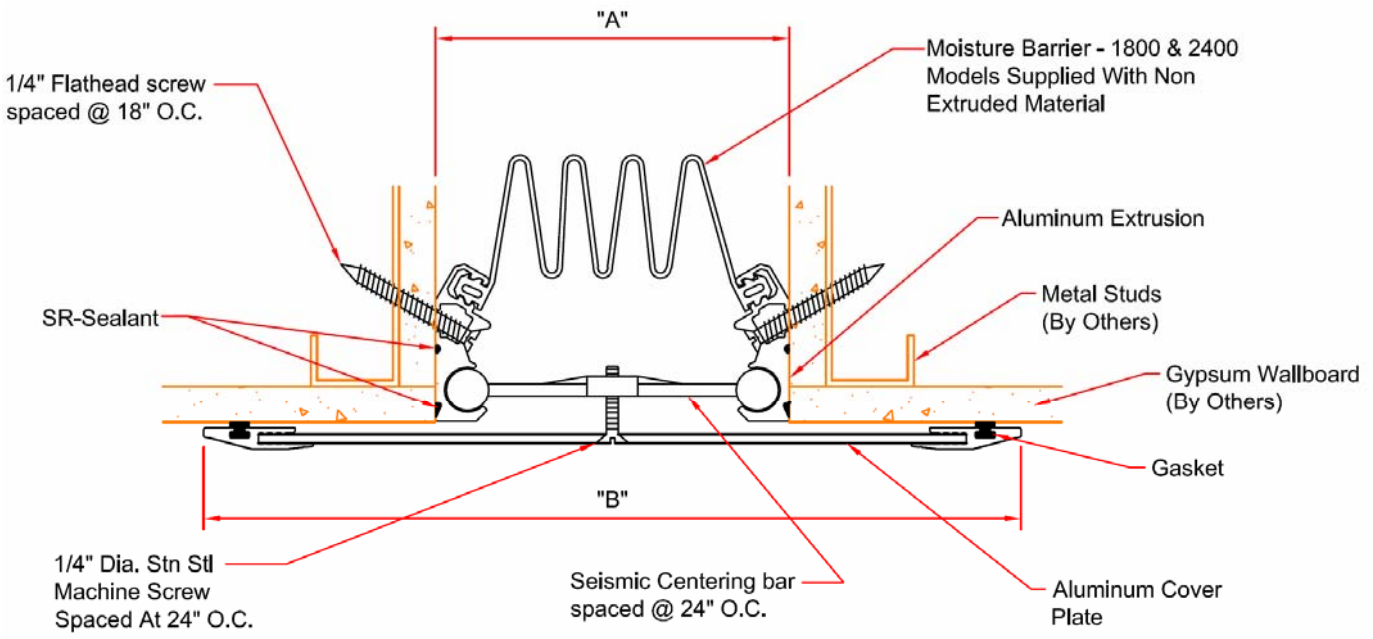

EJ-RJX-600 THRU EJ-RJX-2400 DETAIL

WALL-TO-WALL EXTERIOR CONDITION

( ) - Denotes Millimeters

DIMENSION CHART					
MODEL	"A" @ MIN.	"A" @ MID.	"A" @ MAX.	"B"	TOTAL MOVEMENT
EJ-RJX-600	2-1/4"(57)	6"(152)	12"(300)	13-1/2"(343)	9-3/4"(248)
EJ-RJX-800	2-1/4"(57)	8"(203)	16"(400)	17-1/2"(445)	13-3/4"(349)
EJ-RJX-1000	2-3/4"(70)	10"(254)	20"(508)	21-1/2"(546)	17-1/4"(438)
EJ-RJX-1200	3"(80)	12"(305)	24"(600)	25-1/2"(648)	21"(534)
EJ-RJX-1800	3"(80)	18"(457)	36"(900)	37-1/2"(953)	33"(800)
EJ-RJX-2400	3"(80)	24"(610)	48"(1200)	49-1/2"(1257)	45"(1100)

NYSTROM®

Right to site.

9300 73rd Avenue North
Brooklyn Park, MN 55428

PROJECT:

CONTRACTOR:

ARCHITECT:

INITIALS: **QTY:** **DATE:** **PART NUMBER:**