ITEM #	PART NUMBER	DESCRIPTION	QTY
10	27514	SI-750 ADHESIVE	1
20	27511	SPLICE POST	20

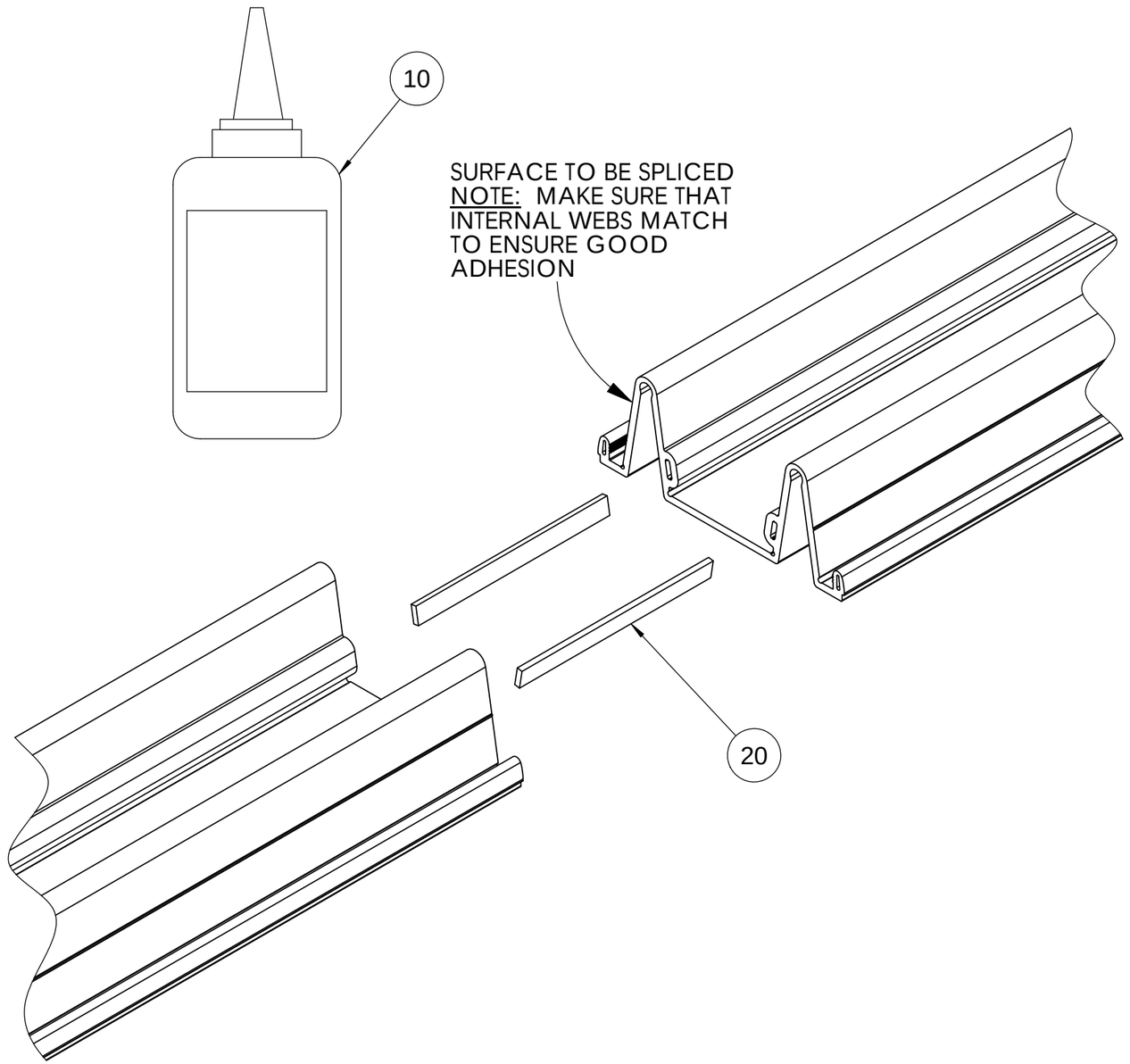

1. CUT ENDS OF SEAL WITH A SHARP KNIFE AND MITER BOX TO THE DESIRED ANGLE. INSURE THAT CUTS ARE CLEAN AND STRAIGHT.

2. CLEAN ENDS OF SEAL WITH A SOLVENT.

3. APPLY SI-750 ADHESIVE TO ONE OF THE TWO SEAL ENDS TO BE BONDED.

4. INSERT SPLICE POSTS INTO ALIGNMENT HOLES.

5. APPLY PRESSURE BRINGING THE TWO SURFACES INTO TIGHT CONTACT IMMEDIATELY AFTER ADHESIVE IS APPLIED. HOLD IN PLACE FOR ONE OR TWO MINUTES FOR INITIAL BOND.

6. RE-CHECK QUALITY OF ALL SPLICES/MITERS AND APPLY ADHESIVE AS REQUIRED.

7. IT IS USUALLY RECOMMENDED TO ALLOW 15 MINUTES PRIOR TO INSTALLING SEAL. TO ACHIEVE PROPER WORKING STRENGTH CARE SHALL BE EXERCISED BECAUSE IT TAKES 24 HOURS FOR ADHESIVE TO FULLY CURE.

28092

NYSTROM
Right to site.
9300 73rd Avenue North
Brooklyn Park, MN 55428

TITLE:
EJ, Splice Kits
Butt Joint, EJ-EWN
Adhesive bottle 1oz and 20 splice posts

	NAME	DATE
DRAWN	DKL	06/16/11
RELEASED	-	-

SIZE	DWG. NO.	REV
B	28092	A

WEIGHT: 1.14 SHEET 1 OF 1

PROPRIETARY AND CONFIDENTIAL: THE INFORMATION CONTAINED IN THIS DRAWING IS THE SOLE PROPERTY OF NYSTROM. ANY REPRODUCTION IN PART OR AS A WHOLE WITHOUT THE WRITTEN PERMISSION OF NYSTROM IS PROHIBITED.