EJ-EWN-200/300/400 Series

EXPANSION JOINT COVER FOR WALLS, SOFFIT AND CEILING

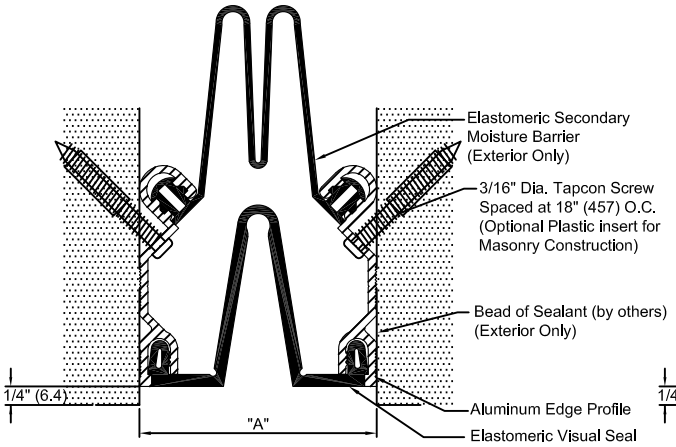

EJ-EWN-200 DETAIL

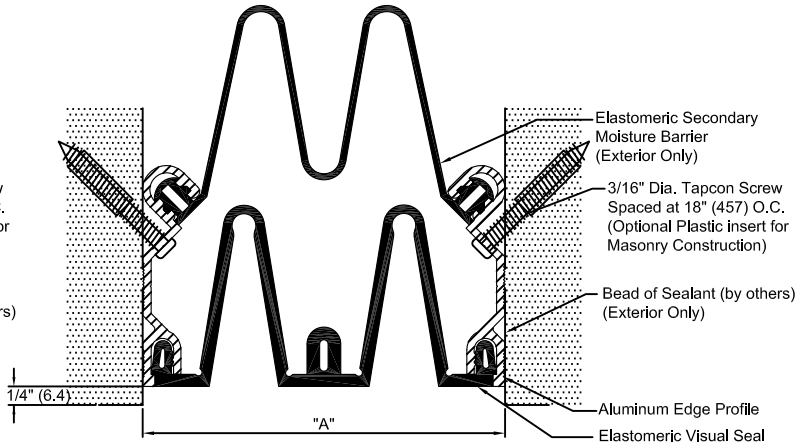

EJ-EWN-300 DETAIL

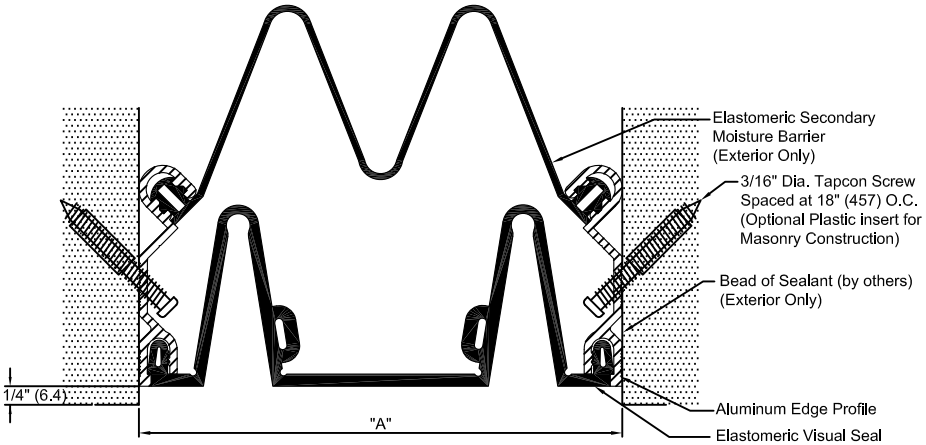

EJ-EWN-400 DETAIL

( ) - Denotes Millimeters

Dimension Chart			
MODEL	"A" @ Mid.	"A" @ Max.	Total Mv't
EJ-EWN-200	2.00"(51)	4.00"(102)	2.625"(67)
EJ-EWN-300	3.00"(76)	6.50"(152)	5.125"(130)
EJ-EWN-400	4.00"(102)	7.75"(199)	4.75"(121)

NYSTROM®

Right to site.

9300 73rd Avenue North
Brooklyn Park, MN 55428

PROJECT:

CONTRACTOR:

ARCHITECT:

INITIALS: **QTY:** **DATE:** **PART NUMBER:**