EJ-EWN Series Drain Boot (Field Installed)

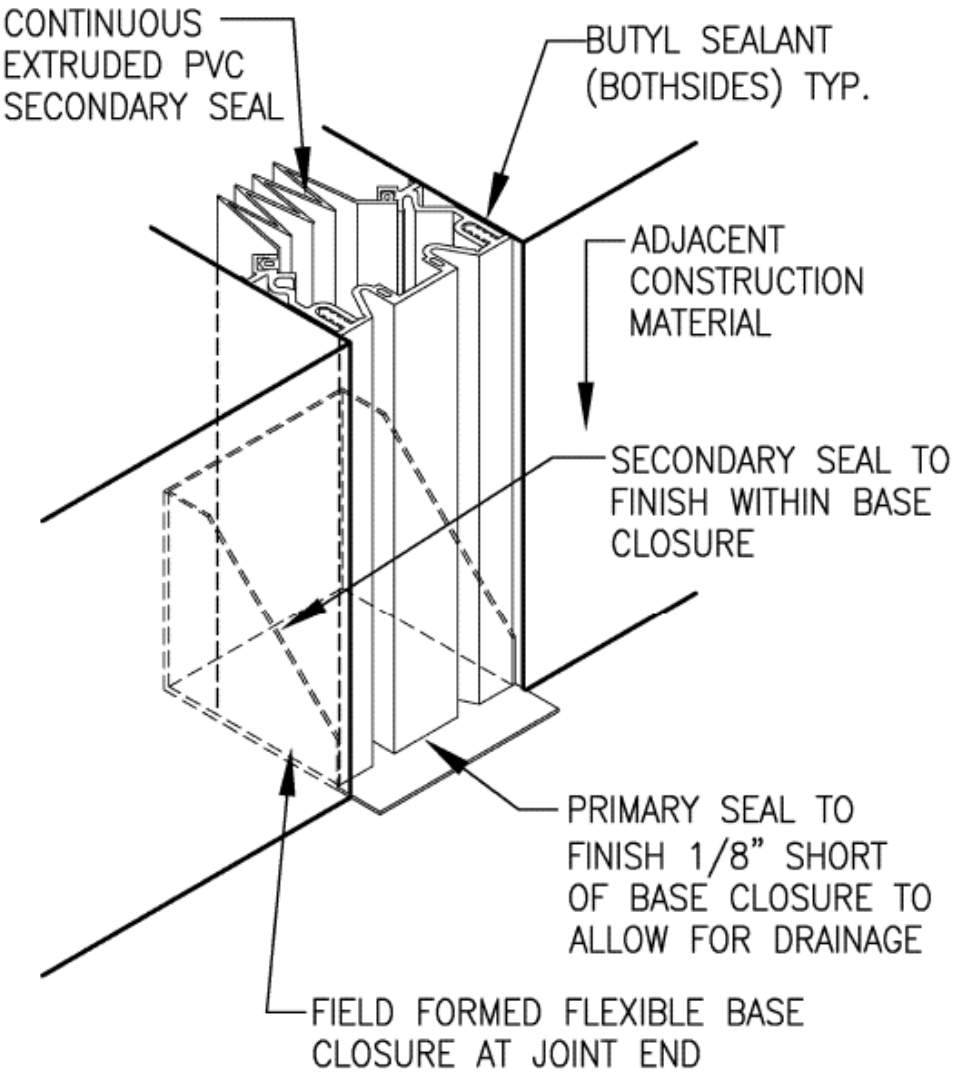

BASE CLOSURE AT JOINT END

NYSTROM®
Right to site.
9300 73rd Avenue North
Brooklyn Park, MN 55428

PROJECT:
CONTRACTOR:
ARCHITECT:
INITIALS: **QTY:** **DATE:** **PART NUMBER:**