SA150 SERIES ALUMINUM EXPANSION JOINT

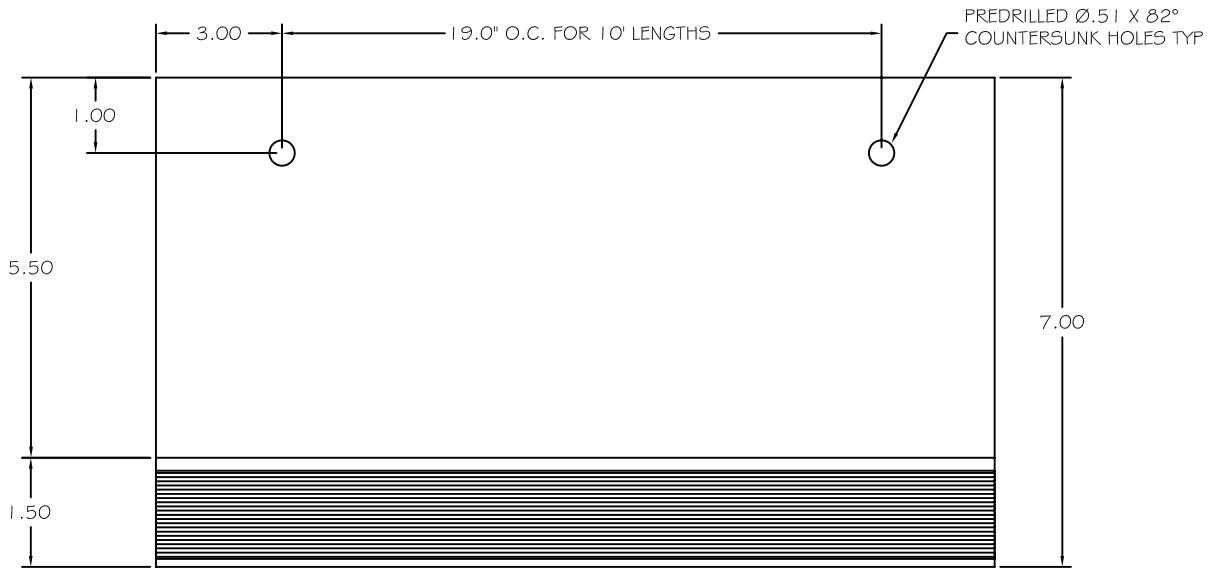

PLAN VIEW
(NOT TO SCALE)

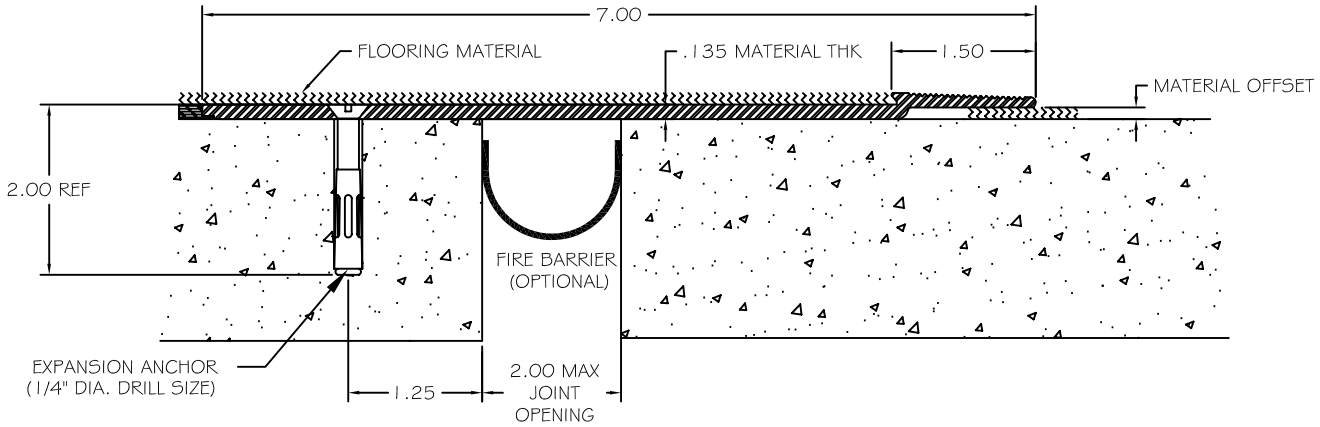

SURFACE CROSS SECTION
(NOT TO SCALE)

SPECIFICATIONS

- 6063-T6 ALUMINUM
- MILL FINISH
- SUPPLIED WITH EXPANSION ANCHORS
- STANDARD LENGTH=10' / SECTION

PART NUMBER	MATERIAL OFFSET
SA150-125	.125
SA150-250	.250
SA150-375	.375

MAX LOAD @ 2" JOINT OPENING	
CONCENTRATED	100#
UNIFORM	70 PSI

NYSTROM®
Right to site.

9300 73rd Avenue North
Brooklyn Park, MN 55428

PROJECT:
CONTRACTOR:
ARCHITECT:
INITIALS: QTY: DATE: PART NUMBER: