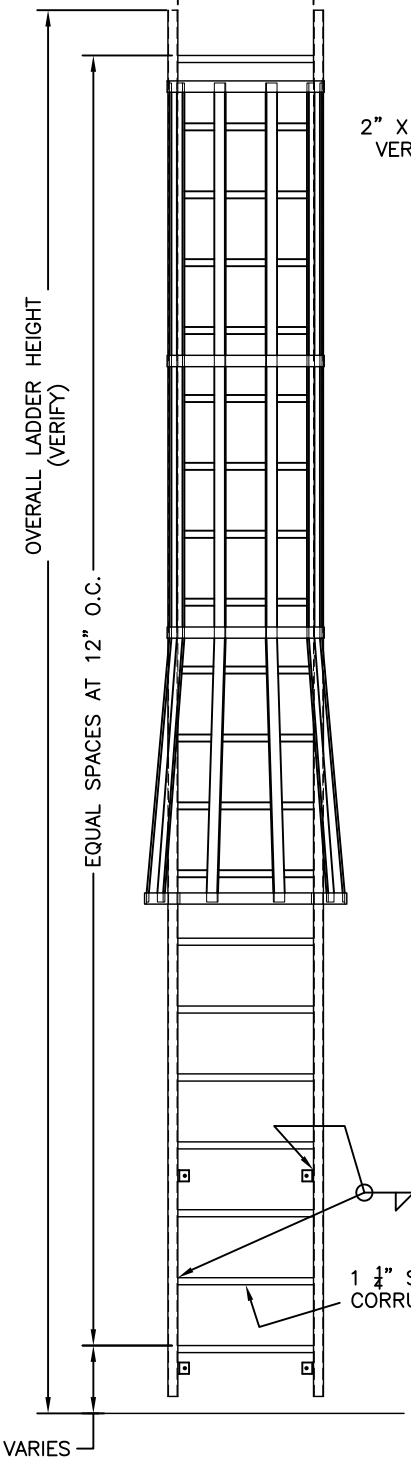

FRONT ELEVATION

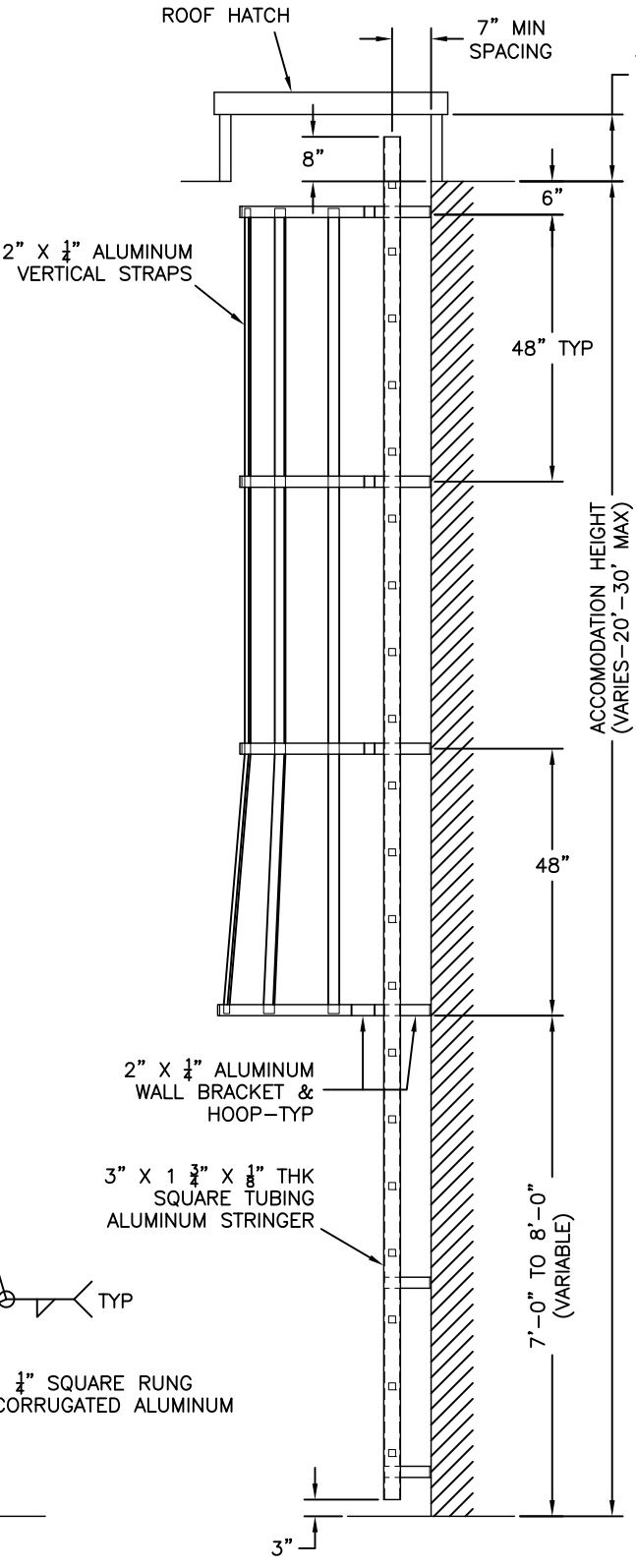

SIDE ELEVATION

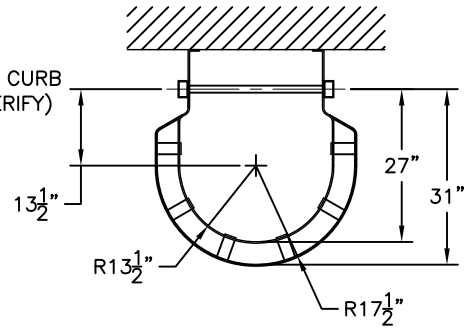

CAGE TOP VIEW

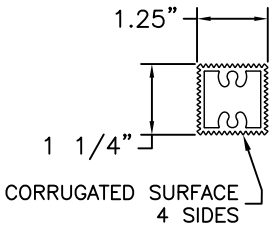

RUNG

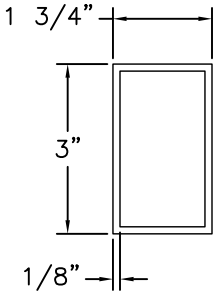

STRINGER

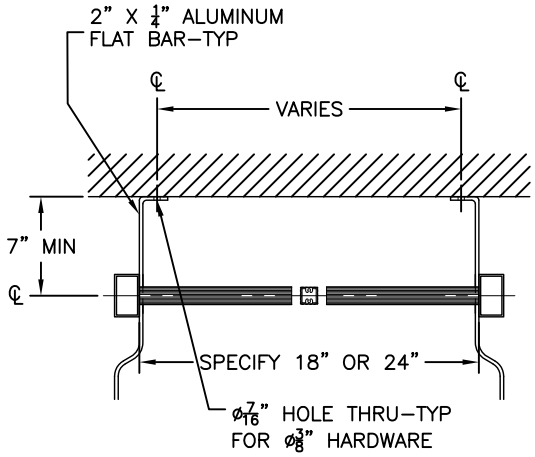

RUNG ASSEMBLY

NOTICE – THIS DRAWING AND ALL OF THE INFORMATION THEREON IS THE CONFIDENTIAL PROPERTY OF UPNOVR, INC. IT HAS BEEN PROVIDED TO YOU FOR A LIMITED PURPOSE IS NOT TO BE USED, REPRODUCED, OR DISCLOSED TO OTHERS FOR ANY OTHER PURPOSE.

MATERIAL

TREATMENT

UNLESS OTHERWISE SPECIFIED
DIMENSIONS ARE IN INCHES
TOLERANCES ARE

FRACTIONS	DECIMALS	ANGLES
	.X .X	
FRAC	.XX .XX	ANGLE
	.XXX .XXX	

APPROVALS	DATE
DRAFTED	
CHECKED	
APPROVED	

UPNOVR
3 CRANE WAY
HOOKSETT, NH 03106-6476
TEL: 1-603-625-8639
FAX: 1-603-625-8650

TITLE **U-300**
ALUMINUM HEAVY DUTY HATCH ACCESS WITH SAFETY CAGE

SIZE	PART/PROJ. No.	DWG. NO.	REV.
A		U-300	

SCALE	QTY REQ'D	SHEET
NTS		