INSTALLATION INSTRUCTIONS FOR MODEL 652DD BY:

INDUSTRIAL LOUVERS Inc.

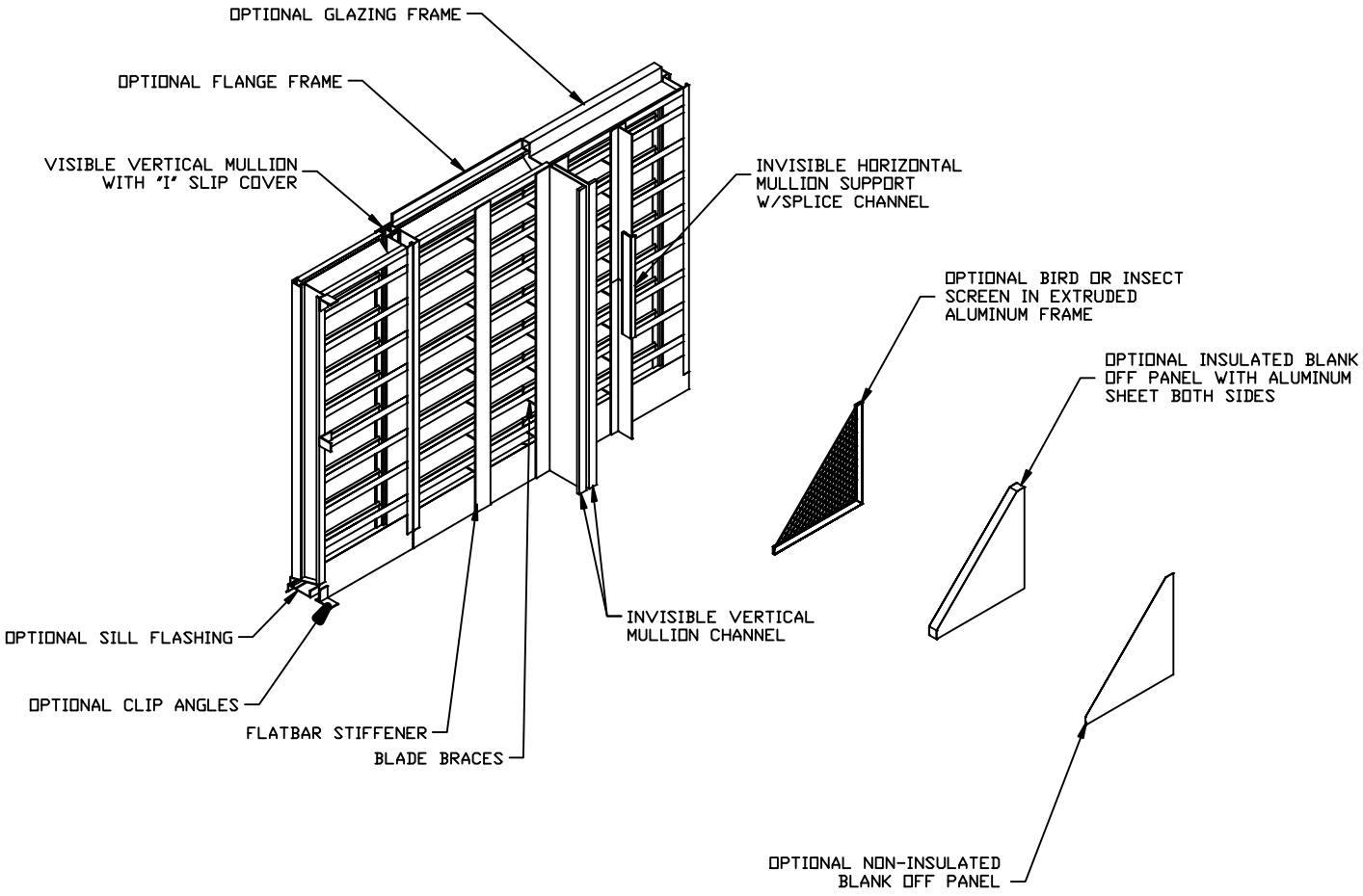

- **READ THESE INSTRUCTIONS COMPLETELY BEFORE STARTING INSTALLATION**
- **USE THESE INSTRUCTIONS IN CONJUNCTION WITH INDUSTRIAL LOUVERS SHOP DRAWINGS**

STEP 1

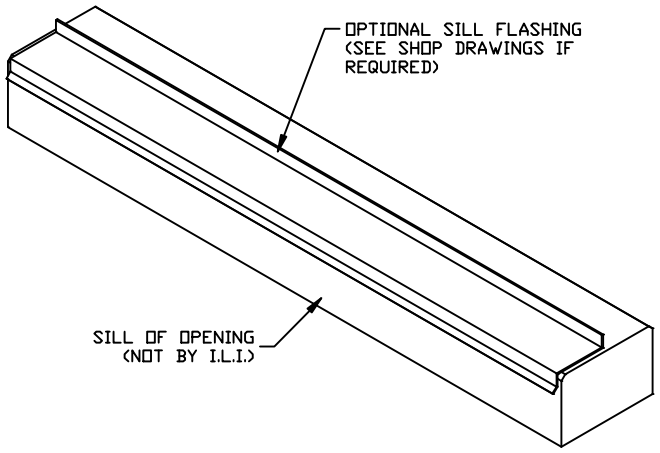

HEAD AND JAMBS ARE NOT SHOWN FOR CLARITY

INSTALLING SILL FLASHING

1. **LOCATE IF SILL FLASHING IS REQUIRED PER SHOP DRAWINGS.**
2. **ATTACH APPLY CAULK (NOT BY I.L.I.) TO SILL OF OPENING SET SILL FLASHING IN CAULK.**

STEP 2

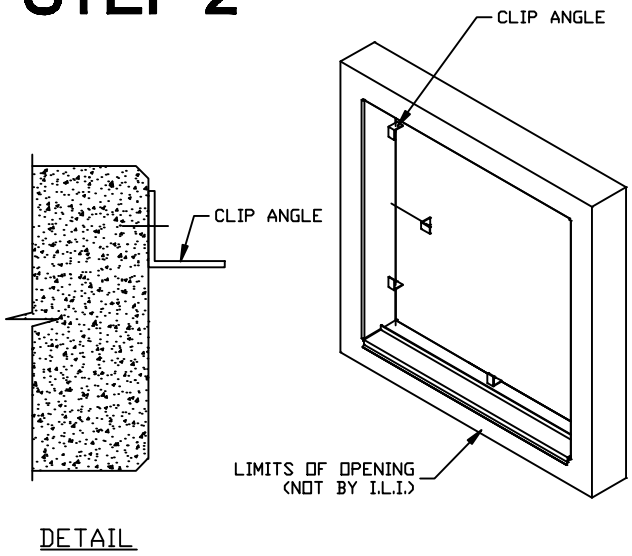

DETAIL

INSTALLING CLIP ANGLES

1. **REFER TO SHOP DRAWINGS FOR SIZE AND DETAILS OF CLIP ANGLES.**
2. **MEASURE SET BACK PLACEMENT OF CLIP ANGLES , AND DRILL HOLES INTO WALL.**
3. **ATTACH CLIP ANGLES TO WALL. (ALL ANCHORS TO SURROUNDING CONDITIONS ARE NOT SUPPLIED BY I.L.I.)**

STEP 3

INSTALLING LOUVER

1. **PLACE LOUVER SECTION INTO OPENING.**
2. **SHIM AROUND LOUVER TO CREATE PROPER DISTANCE FROM SURROUNDING CONDITIONS. (SEE SHOP DRAWINGS FOR DETAILS)**
3. **ONCE PROPER PLACEMENT IS ACHIEVED. USE HOLES IN CLIP ANGLES TO DRILL PILOT HOLES IN JAMB, HEAD AND SILL.**
4. **FASTEN CLIP ANGLES TO LOUVERS WITH FASTENERS AS PROVIDED BY I.L.I.**

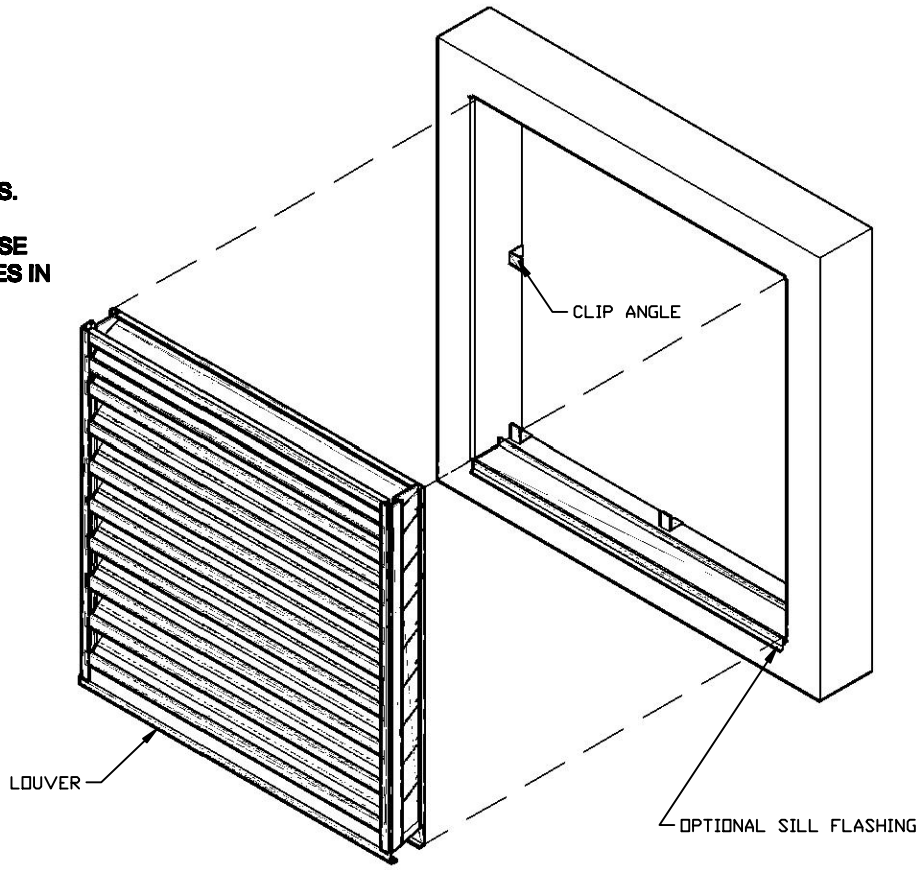

STEP 4

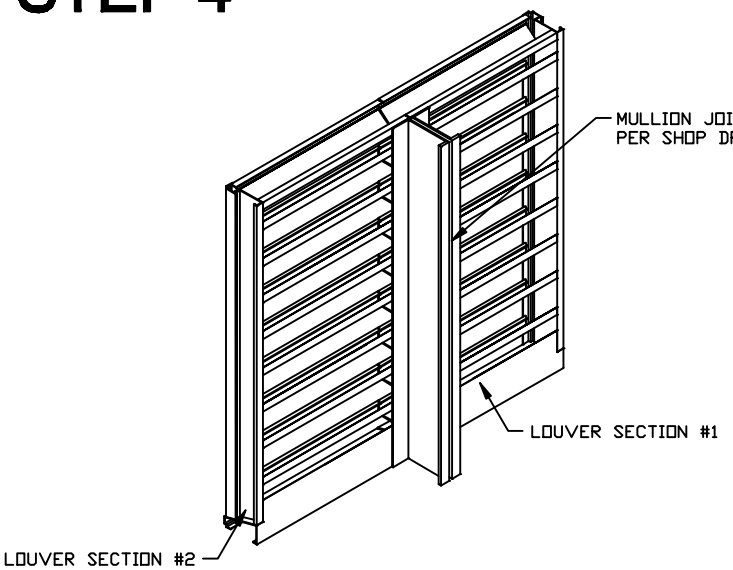

INVISIBLE VERTICAL MULLION

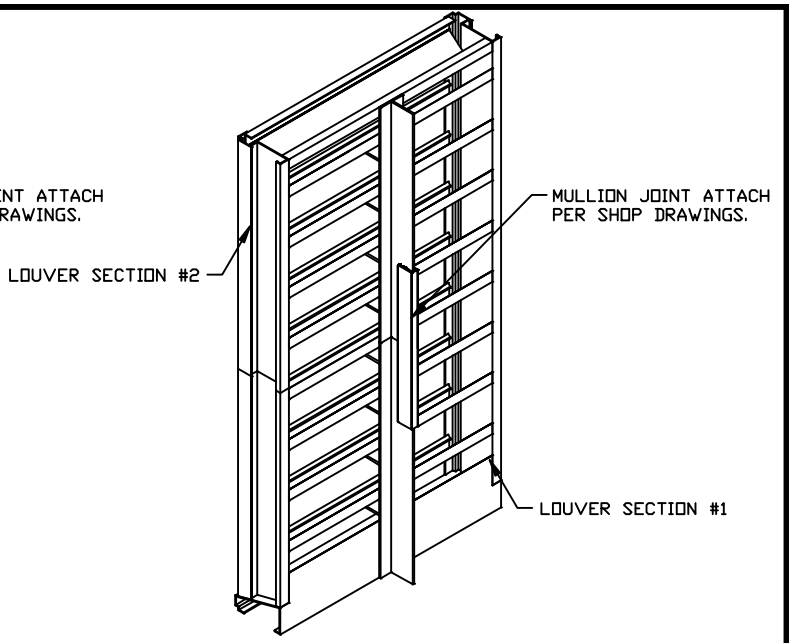

INVISIBLE HORIZONTAL MULLION

INSTALLING MULTI-SECTION LOUVERS

1. **IF LOUVER IS SINGLE SECTION SKIP TO STEP 5.**
2. **IF LOUVER IS MULTI-SECTION INSTALL SECTION #1 AS PER STEP 1-3.**
3. **PUT SECTION #2 IN OPENING FOLLOWING STEPS 1-3. MAKING SURE SECTION # 1 ALIGNS WITH SECTION #2.**
4. **ATTACH MULLION JOINT PER SHOP DRAWINGS.**
5. **CONTINUE PROCESS UNTIL ALL SECTIONS ARE INSTALLED.**

STEP 5

CAULKING

1. **IF REQUIRED CAULK AROUND PERIMETER OF LOUVER AS SHOWN BELOW. (CAULK IS NOT SUPPLIED BY I.L.I.)**

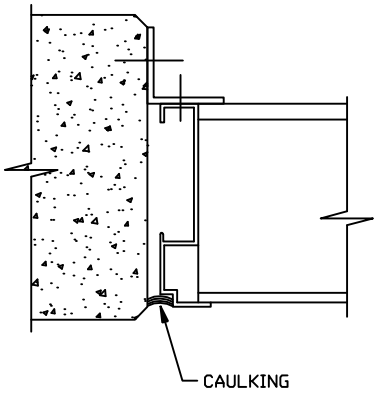
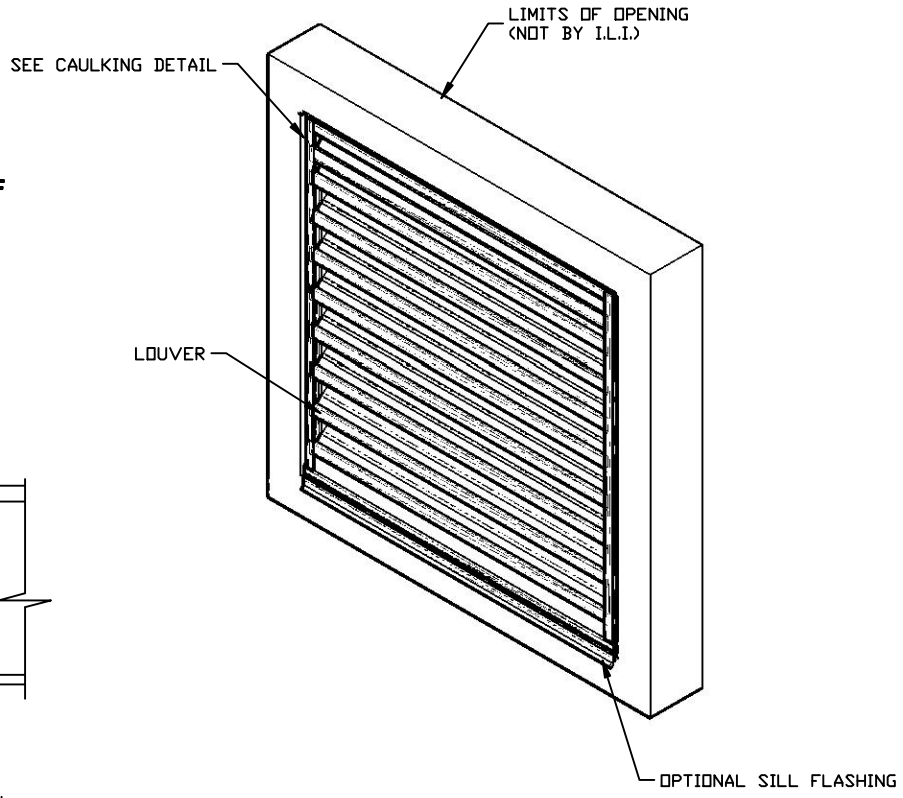
CAULKING DETAIL